DDS- Planning & Zoning: Historic Review Application

Submission date:	**5 October 2021, 10:32PM**
Receipt number:	**411**
Related form version:	**2**

Property Information

Property Address	**Street: 80 Terry Road** **City: Hartford** **State: CT** **Zip Code: 06105**
Zoning District:	**N1-1**
Parcel ID:	**130-180-019**
Property Owner:	**Jennifer L. Starble**
Property Owner's Address:	**Street: 80 Terry Road** **City: Hartford** **State: CT** **Zip Code: 06105**
Phone:	**860-478-2799**
Email:	**jstarble@gmail.com**

Applicant

Please check if “Applicant” is the same as “Property Owner”	**Please check if “Applicant” is the same as “Property Owner”**
Name of Applicant:	
File Date:	

Address:	**Street:** **City:** **State:** **Zip Code:**
Phone:	
Email:	

Primary Point of Contact

Name:	**Jonathan and Jennifer Starble**
Phone:	**860-478-2799**
Email:	**jstarble@gmail.com**
Describe your application action(s) and provide as much detail as possible.	**Proposed replacement of exterior windows. Please see cover letter and attachments.**
Proposed work:	**Repairs** **Other: Window replacement**
Current materials being repaired/replaced:	**Wood and glass windows, aluminum storm windows**
Materials/products being used in work:	**Marvin Elevate Insert Windows**
Please upload all supporting materials and photographs below.	**21.10.05 Letter to HCC re Window Project.pdf**

Signatures

Signature of Applicant:	 **Link to signature**
Name of Applicant:	**Jennifer L. Starble**
Date:	**10/5/21**

	If you are not the property owner, you must attach a Letter of Authorization from the property owner to apply.
Letter of Authorization from Property Owner	
Date:	**10/5/21**

Jennifer L. Starble
80 Terry Road
Hartford, CT 06105

October 5, 2021

Hartford Historic Preservation Commission
Hartford Civic Hall
550 Main Street
Hartford, CT 06103

Re: Application for Historic Review of Window Project at 80 Terry Road

Dear Commission Members:

Thank you for considering our application for historic review of our window replacement project at 80 Terry Road. My husband and I have carefully researched and planned our project in a manner that honors and preserves the historic nature of our 1927 Tudor Revival home in the West End. We are aware of the Commission's general preference of repairing front-facing wood windows rather than replacing them. We share this preference but have determined, after significant consideration and consultation with experts, that replacement is necessary. This proposed action has become particularly urgent due to the serious water damage caused to our house during recent storm events. We are respectfully submitting this letter to provide the background and details of our proposed replacement project for your consideration.

In order to preserve the historic visual integrity of our Tudor Revival home, which we just recently purchased this past spring, we are proposing the use of high-end Marvin Elevate "insert" windows that contain the same grille pattern and style as our house's original windows. This product will restore the original 1927 look of the windows by eliminating the need for the current protruding aluminum storm windows, which were added to the house long after the original construction and are inconsistent with the historic look of the structure. Because our proposed new windows are only inserts, our project will not involve any change to the attractive original wood sills and frames on the exterior and interior of the existing windows. Thus, from an observational standpoint, the majority of the features of each original window will be retained. Also, the new portion of each window – which will be constructed of wood on the interior and weather-resistant fiberglass on the exterior – will look identical to the current window, but without the unattractive after-added storm window. It should also be noted that we will only be replacing the standard-sized double-hung windows of the house. As part of an expert assessment of our windows and doors, one front-facing door and one front-facing window were identified as custom-made and possessing particular historic value that would be extremely difficult to replace. Accordingly, we will not be replacing this window or door.

Our house has 71 original windows, 69 of which have been identified as standard-sized windows, meaning that these windows were typical plant-manufactured items and were not custom-built for the house in 1927. The exceptions are the windowed front door and the

adjacent front-facing window in the foyer. These two features are unusually sized and contain elaborate lattice-like designs that intersperse lead with custom-made glass. Of the remaining 69 windows, all of them have grilles and almost all of them are double-hung. Consistent with the Tudor Revival style, the windows are framed on the exterior with flush or low-profile sills and are accompanied by simple, brown wood frames surrounding the windows that exist in the stucco portions of the house on the second and third floors. Shutters are utilized in selected front-facing windows around the chimney.

At some point subsequent to original construction, likely the 1950s, storm windows were added to the exterior of all windows, except the custom-made foyer window and door. The style, composition, color, and size of the storm windows significantly detract from the Tudor style. In particular, the silver aluminum color clashes with the authentic brown-and-cream patterns and adds a conspicuous modern look to a house that otherwise contains all authentic features, including a high-pitched slate roof and a brick-and-stone first-story façade. The storm windows also physically obstruct much of the brown wood trim and the grilles of the paned glass, thereby detracting from the visual attractiveness of the original design. In addition, the protruding, multi-beveled style of the storm windows is inconsistent with the original windows and gives the house an inappropriate and unauthentic look.

The frames and interior sills of the original windows are generally in adequate condition, but the remaining parts of the original windows are in extremely poor condition and do not function properly. In addition, the storm windows are also in extremely poor condition and do not function properly. Restoring these windows to a functioning status is not feasible due to numerous issues. The majority of the original windows either do not open at all or require an unreasonable amount of force to open. Most of the ropes and pulleys are not functional. There is also rotting, peeling, and other wood damage on many of the windows, particularly those that are facing west, which is the front of the house. It appears that after previous owners installed central air conditioning in the house, the occupants of the house generally did not open the windows, therefore resulting in windows that are largely inoperable. This creates a significant safety issue in the event of a fire or other emergency.

In addition, at some point during prior ownership, the interior of the original window frames were structurally altered in some way. This was done presumably for security and/or insulation, but the result was that there is no longer reasonable access to the inside of the frame where all of the ropes and pulleys are contained. We hired a contractor to attempt to repair the ropes and pulleys, but the contractor was unable to do so as a result of this modification. Another major obstacle to repairing the windows relates again to the general non-use of the windows following the installation of central air. This non-use was accompanied by general poor maintenance of windows, resulting in severe weather damage to the grilles of many front-facing (westerly) and side-facing (northerly) windows, particularly on the second floor. Even if repair of the original windows were otherwise feasible and desirable (which it is not), any repair would require significant glazing work on the glass panes of the original windows.

Similar to the original windows, the storm windows are also extremely difficult to open. In addition, many of them are in in danger of falling off of the house. Last winter, when the

house was on the market prior to our purchase, one of the storm windows on the third floor blew off the house and landed near the neighbors' driveway. Two other windows in the front of the house have separated from the façade and are currently being held in place by bungee cords. Several other storm windows rattle significantly when there is any type of mild wind. Retaining the current storm windows simply is not an option.

Perhaps most importantly, the overall poor condition of the original windows and the storm windows has resulted in significant and ongoing water damage to our house during the short period of time that we have been living at 80 Terry Road. During a storm on July 9, 2021, a significant amount of water infiltrated our house through the front-facing windows, resulting in damage throughout our foyer ceiling. The infiltration through both the original windows and the storm windows was so severe that water traveled almost eight feet into the house, where it then poured through a chandelier fixture and caused electrical damage. Water also poured through the windows on the second floor, mostly into front-facing rooms. Subsequent storm events this summer also resulted in infiltration.

Given the obvious need for a permanent solution to our window issues, we have engaged Kevin Trumbull of Trumbull Building and Remodeling, LLC. Mr. Trumbull has performed other work for us, including window replacements in our former home. He performs his work with the highest level of quality and integrity. In light of our desire to preserve the historic features of our windows, we asked Mr. Trumbull to examine our windows and make recommendations regarding the feasibility of repair or replacement. After examination, he determined that repair is not feasible. Instead, he strongly recommended Marvin "inserts," which he has successfully used at other historic homes in the West End, including 2 Woodside Circle. The inserts preserve the original wooden sills and frames, while utilizing an authentic grille pattern that matches the original 1927 style. As with the original windows, the grilles for the Marvin windows are outside of the glass, not inside. Also, the inserts are constructed in a manner that eliminates the need for any additional storm windows, thereby restoring the original exterior look and feel from 1927. The house at 2 Woodside Circle is an excellent example of the authentic look of these types of windows on a historic West End house. Photographs of the front of 2 Woodside Circle show that it is practically impossible for a visual observer to distinguish between the two types of windows.

Thank you for your consideration of this application. Attached are photographs, specifications, and other supporting documents, along with an index identifying each item. At the hearing, we will answer any questions that you may have regarding our proposed project. Please note that I hereby authorize my husband, Jonathan Starble, to speak on our behalf at the hearing.

Sincerely,

Jennifer L. Starble

Jennifer L. Starble

Attachments to 80 Terry Road Application

1. Photograph – Front of house
2. Photograph – Back of house
3. Photograph – Close-up of example of leaking front-facing window
4. Photograph – Close-up of example of front-facing window held by bungee cords
5. Photograph – Close-up of example of pealing, damaged front-facing window
6. Photograph – Water damage to foyer ceiling and chandelier
7. Photograph – Close-up of example of damaged interior of front-facing window
8. Project Estimate from Trumbull Building and Remodeling, LLC
9. Photograph – Examples of Marvin Insert Windows at 2 Woodside Circle
10. Marvin Elevate Inserts – Product Manual
11. Marvin Elevate Inserts – Construction Specifications
12. Marvin Elevate Inserts – Architectural Details

Attachment 1

Attachment 2

Attachment 3

Attachment 4

Attachment 5

Attachment 6

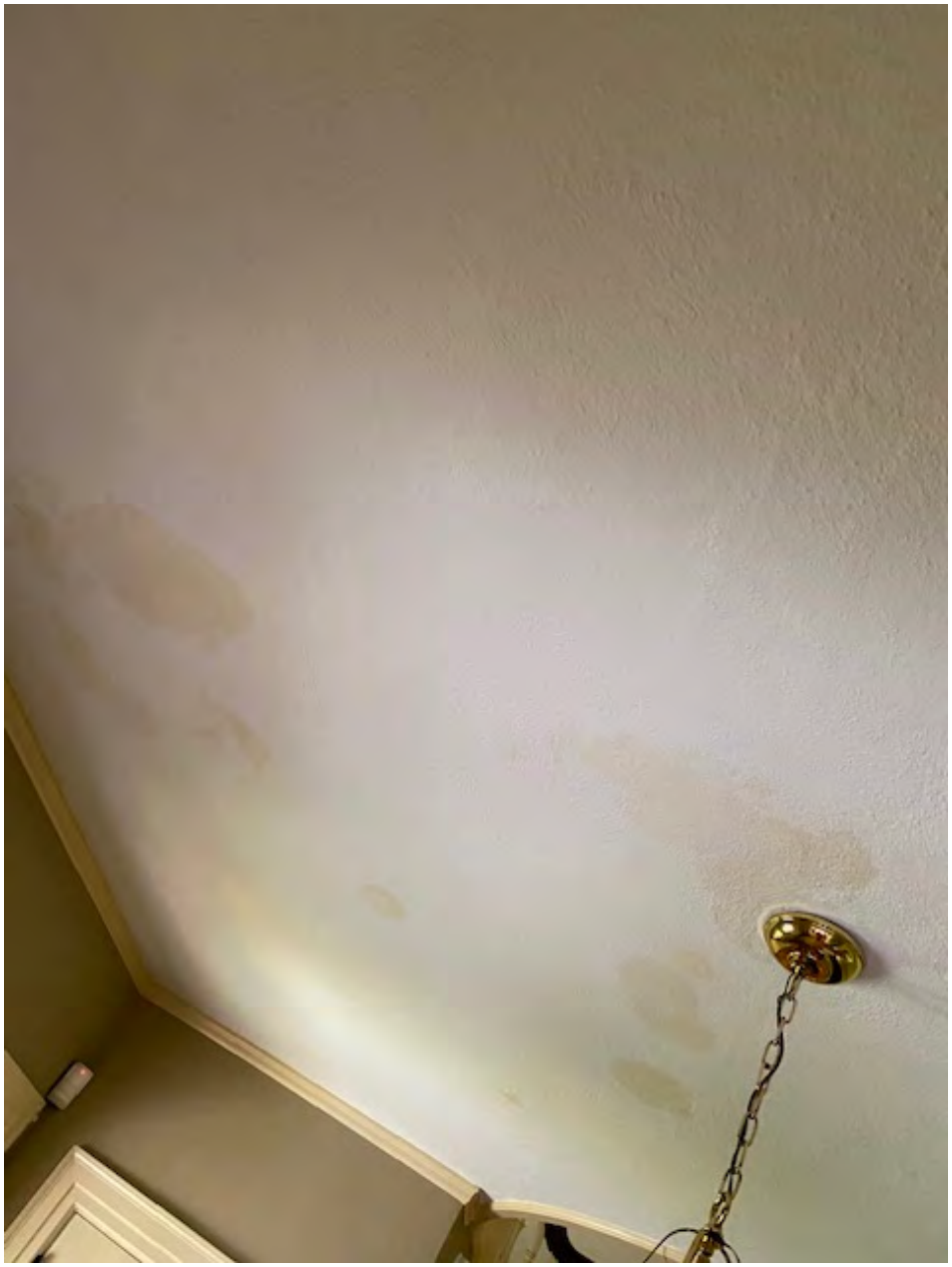

Attachment 7

Attachment 8

TRUMBULL BUILDING & REMODELING LLC

Estimate

Date	Estimate #
9/21/2021	844

Name / Address
Jen & Jonathan Starble 80 Terry Rd. Hartford, CT 06105

Terms

Description	Total
WINDOW REMODEL ESTIMATED FOR ABOVE ADDRESS:	
- Remove and dispose of (69) windows	
- Supply and install (69) Marvin Elevate windows: (2) casements, (1) sash, (5) casement inserts and (61) double hung inserts all with bronze exteriors, white interiors, Low E2 w/ argon glass, 7/8" SDL w/ spacer bars, white sash locks, exterior aluminum screen frames and charcoal fiberglass screens	
- Light cuts (19) 9 over 9, (42) 6 over 6, (5) 4 over 4, (1) 9-light and (2) 6 light	
- Supply and install fiberglass insulation around window perimeters	
MATERIALS, LABOR & DISPOSAL * =	89,830.00
* Cost of building permit is not included	

Quotation will be honored for 30 days.	**Total**	**$89,830.00**

35 Burwell Road ▌ New Hartford, CT 06057 ▌ 860-738-4228

CT Lic. #523964

Attachment 9

MARVIN

Attachment 10

OWNER'S MANUAL

ELEVATE + ESSENTIAL

MARVIN ELEVATE™ COLLECTION | MARVIN ESSENTIAL™ COLLECTION

Table of Contents

Introduction

Marvin® thanks you for choosing high performance Ultrex® products for your home. Whether you selected the rich wood interiors of the Elevate collection, or the clean lines of the Essential collection, the energy efficient Low E insulated glass and durable Ultrex construction will provide you windows and doors you'll appreciate for years.

How To Use This Manual

This owner's manual was created to help keep your Marvin products looking beautiful and performing well for years to come. Take a few minutes to carefully read through this manual. You'll find photos that will help identify your Marvin products, general information on cleaning, and answers to common questions. Included is an annual check list with recommended maintenance tips that can keep your Marvin products performing perfectly for years to come.

For questions on service or maintenance not covered in this manual, please contact your local Marvin dealer or visit our website at **marvin.com.**

Warranty

Marvin is committed to bringing you products of the highest quality and value. Our made-to-order manufacturing philosophy is one example of our commitment. Our warranty is another.

Please visit the warranty section of our website **marvin.com/warranty** for full warranty details on your product.

Elevate collection products shown in images unless noted otherwise.

Annual Window and Door Checklist

Use this checklist as a maintenance reminder for your windows and doors to help keep your product operating properly and prevent future problems. Once a year should be sufficient.

- ☐ Safety first: Use caution on ladders, and wear protective eyewear and clothing. When working with primers, paints, stains, cleaning solutions, etc., make sure that you use and dispose of these materials according to local codes or manufacturer's instructions.
- ☐ Inspect weather strip for damage or loss of performance. Contact the local Marvin retailer if your weather strip requires replacement. Take care when using paints, stains, or varnishes. These products contain solvents which, when coming in even momentary contact with weather strip, can cause it to become brittle and require replacement.
- ☐ Examine window and/or door interior and exterior finishes. Periodic cleaning and touch-up can extend the life of your finish.
- ☐ Inspect exterior caulking around the outer edges of the window or door frame. Trim off any loose caulking and reseal any gaps with a good quality caulk.
- ☐ Check all hardware (locks, opening mechanisms, etc.) for smooth operation.
- ☐ Inspect exposed hardware screws; tighten if loose.
- ☐ Clean sand, dirt, or dust from door and window hinges, sills, and tracks.
- ☐ When soiled, wash the exterior of your doors and windows with an approved cleaning solution found at **marvin.com/cleaning.**

Hazard Notations

Please familiarize yourself with the following hazard notations used throughout this manual.

Caution	Warning	Seek Assistance	Tips/Hints
			
Mistake or misuse could cause damage to the window or result in faulty installation and unit performance.	Mistake or misuse could result in personal injury and/or severe damage to unit, equipment, and/or structure.	Information on alternative procedures, definitions, helpful hints.	Help from another individual is necessary to perform the task safely and correctly.

Window Part Identification

In the following pages you'll find operation and maintenance information on Marvin® window products. Refer to the product illustrations for the names of your particular windows, and use the illustration below to help identify window components.

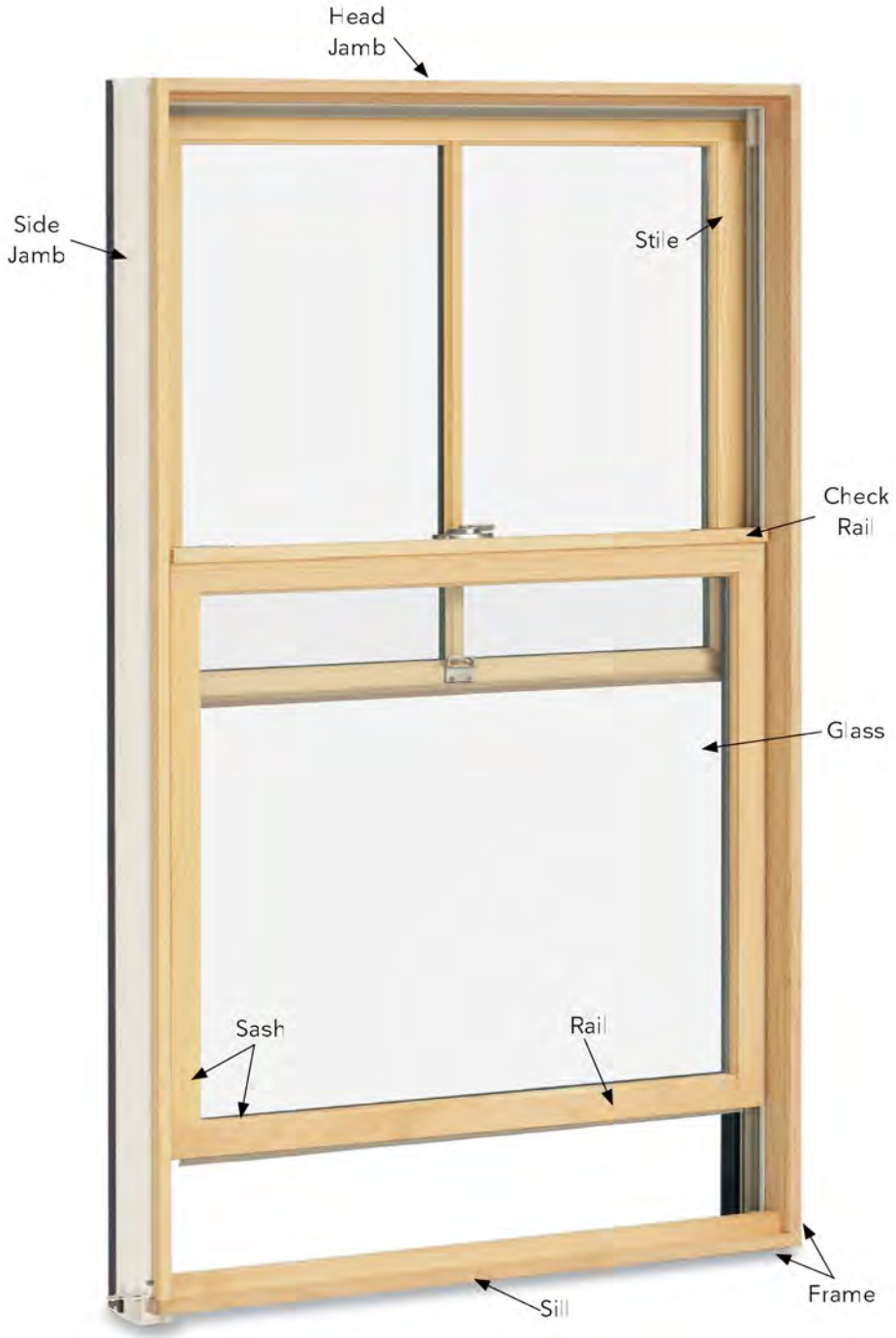

Window Products

Casement

Awning

Double Hung

Glider

Polygon

Round Top

Door Products

Sliding Patio Door

Sliding French Door

Inswing French Door

Outswing French Door

Glass

Condensation

Before reading this section, pour yourself a nice tall glass of ice water. During cold winters, there is a large temperature difference between the interior and exterior of your home. When the temperature drops outdoors, the glass on your windows tend to have a lower surface temperature than other surfaces in your home and is the first place that you' notice condensation in your home. This is not due to any defect in your window or door, it's simply a sign of needing to reduce the humidity in your home.

Warm air is capable of holding more moisture than cool air. As warm vapor-filled air comes in contact with a cool surface it loses its ability to hold moisture. When moisture-laden air reaches its dew point, moisture condenses on the nearest cool surface. Generally the most obvious surfaces in your home where you' notice condensation are on your windows or the glass of ice water sitting in front of you.

Condensation on your windows is an insightly problem. The last thing you want is a fog blocking the view. But the problem goes deeper than that. If condensation is a chronic occurrence in your home, chances are that you have excessive humidity. If water is accumulating on glass, chances are it is accumulating on other harder to see surfaces such as walls and roof cavities. If left uncontrolled, excess moisture can have serious consequences, including:

- Mold or mildew
- Wood rot and warping
- Roof ice build-up
- Damp, ineffective insulation
- Discolored, blistered or bubbling paint
- Damaging moisture inside walls and attic

Excessive interior humidity is more likely to occur in newer or recently remodeled homes with tight, energy efficient construction, causing a build up of moisture to the interior. Information on excessive humidity and how to reduce condensation on your windows can be found on the internet by searching for *"window condensation"*.

Mildew Removal

Warning:

To prevent personal injury during mildew removal, always wear protective eyewear, skin protection, and keep the area well ventilated.

Exterior Mildew

Mildew thrives in warm, moist environments and will grow best under these conditions. However mildew can grow to some degree under most climatic conditions. Mildew growth is usually brown or black in color and, for this reason, may be mistaken for dirt on the exterior of your window or door.

Exterior mildew may be removed with an approved cleaning solution found at **marvin.com/cleaning** applied with a soft bristle brush using medium pressure. Rinse the finish well with clean water after cleaning. Make sure the area is clean and reapply if the discoloration persists.

Note: Stronger concentrations of cleaner may damage the exterior surface or finish.

Interior Mildew

If your home has excessive interior moisture, you may experience some discoloration on building materials in various parts of your home, including the lower portions of your windows or doors. This discoloration may be the result of mildew growth and can be removed with an approved cleaning solution found at **marvin.com/cleaning**. Wear protective eyewear and skin protection, and keep the area well ventilated. Make sure the surface is clean and reapply if the discoloration persists.

Note: In some cases where the interior finish has been damaged it may be necessary to refinish the damaged area.

Cleaning the Glass

The best method to clean the glass on your Marvin® window is to first soak the glass surface with clean water to loosen dirt or debris. Use an approved cleaning solution found at **marvin.com/cleaning** and apply cleaner with a non-abrasive applicator. Immediately after washing the glass, remove all of the cleaning solution with a squeegee, taking care not to allow any metal surface of the cleaning equipment to touch the glass surface. Make sure that no abrasive particles are trapped between the glass and the cleaning material. Window and door gaskets, seal parts, and frames are susceptible to deterioration if cleaning solutions are not rinsed and dried immediately after cleaning.

Caution:

Do not use razor blades, knives, or scrapers for cleaning glass surfaces.

Tempered Glass

Certain Marvin windows use tempered glass for safety reasons. Tempered glass is heated and cooled at an accelerated rate, adding strength and shatter resistance. You may notice a slight amount of distortion – this is normal and due to the tempered glass fabrication process. The logo in the corner of each piece of tempered glass is required by code and safety regulations.

Glass Breakage

Warning:

Should the glass in your window or door happen to break, make sure you use the appropriate personal protection equipment to remove the broken glass; eyeglasses or goggles, sturdy gloves, and heavy protective clothing. Dispose of broken glass in a secure container. Failure to properly handle and dispose of glass could result in injury. Contact your Marvin retailer for information on sash or pane replacement.

Glass Care DO's and DON'Ts

DO	DON'T
• Clean glass when dirt and residue appear	• Use scrapers of any size or type for cleaning glass
• Determine if coated glass surfaces are exposed	• Allow dirt and residue to remain on glass for an extended period of time
• Exercise special care when cleaning coated glass surfaces	• Clean tinted or coated glass in direct sunlight
• Avoid cleaning tinted and coated glass surfaces in direct sunlight	• Allow water or cleaning residue to remain on the glass or adjacent materials
• Start cleaning at the top of the building and continue to lower levels	• Begin cleaning without rinsing excessive dirt and debris
• Soak the glass surface with clean water to loosen dirt and debris	• Use abrasive cleaning solutions or materials
• Use an approved cleaning solution found at **marvin.com/cleaning**	• Allow metal parts of cleaning equipment to contact the glass
• Dry all cleaning materials with approved cleaners	• Trap abrasive particles between the cleaning materials and the glass surface
• Clean one small window and check to see if procedures have caused any damage	• Allow splashed materials to dry on the glass surface

Finishing the Interior on Elevate Products

If you have brand new, bare wood Marvin® Elevate collection products, you must finish them immediately to prevent possible damage to the wood. Make sure bare wood interior door surfaces are clean and dry. Remove any handling marks, debris, or effects of exposure to moisture by sanding lightly with fine sandpaper and wiping clean before applying your choice of finish. Marvin uses a rubber-like material between glass panes and wood sash frames to ensure a weather tight seal. Occasionally, an excess of this silicone sealant, called "squeeze out," appears around the edge of the glass. You can safely scrape off squeeze out with a plastic putty knife without damaging the weathertightness of your unit. It is extremely important that you do not paint locks, hardware, weather strip, or jamb liners. Also, use paints, stains, and varnishes with care; they contain solvents which may come in contact with plastics and vinyl weather strip, cause these materials to lose their flexible qualities.

Caution:

Do not apply paint to Marvin factory pre-finish without first contacting your Marvin dealer for proper instructions.

Painting

When painting Elevate collection product interiors, use only a high quality oil-base or latex paint. To provide a good adhesion of paint, a compatible prime coat should be applied. Paint with panes open (or removed) and do not close until thoroughly dry. Apply one coat of primer and two coats of top quality paint according to the paint manufacturer's instructions.

Staining

Prior to staining, it may be desirable to apply a wood conditioner to obtain a more even finish. Follow the manufacturer's recommended instructions.

When painting Elevate collection product interiors, apply stain according to the manufacturer's instructions. Apply as many coats of stain as necessary to achieve the desired color. After the stain is thoroughly dry, apply at least two coats of sealer (i.e. varnish or polyurethane).

Ultrex® and Maintenance

Marvin Elevate and Essential collection products feature Ultrex, an advanced glass fiber reinforced material, with a finish coat applied during the fabrication process. This factory applied durable finish allows the exterior to withstand extreme temperatures and atmospheric pollutants, while retaining its color and gloss. This translates into a beautiful, low-maintenance exterior. Surface dirt can be removed by washing with an approved cleaning solution found at **marvin.com/cleaning** and rinsing with clean water. Use a soft brush, such as a long-handled car washing brush, to remove any bugs, grime, dirt, or dust. Before using more aggressive cleaners or stubborn stains, test the solution on an inconspicuous area before washing. A thorough clean water rinse should follow.

Cleaning Ultrex

For regular cleaning and maintenance of Ultrex, use an approved cleaning solution found at **marvin.com/cleaning**.

The approved cleaning solutions, when used as directed, can be used on Ultrex materials.

The approved cleaning solutions are not recommended for use with any abrasive materials or applicators. Extreme pressure or scrubbing action is not recommended. In addition, the approved cleaning solutions may leave a residue on the Ultrex surface following their use.

Caution:

No solvents, paint thinner, or other chemicals of any type are recommended for use with Ultrex, as they may affect the functionality and appearance of the coating.

Repairing Ultrex

You will need to supply

- Utility knife
- Putty knife
- Epoxy putty
- Quality exterior grade primer
- 120-150 grit sandpaper
- 320-400 grit sandpaper

Note: Consult your Marvin® representative for information on locally available epoxy putty.

1. Using a utility knife carefully cut around the damaged Ultrex area to remove any jagged edges or loose fibers.
2. Follow manufacturer's instructions for mixing/blending of epoxy. Fill the damaged area thoroughly by pressing epoxy in with a putty knife and remove excess.
3. Once the epoxy has set and cured, sand the repaired area with 120-150 grit sandpaper, until the desired profile/depth has been achieved. Finish sanding with 320-400 grit sandpaper.
4. Lightly sand the surrounding area to remove the factory finish with 320-400 grit sandpaper. Coat the repaired and surrounding area with a quality primer per epoxy manufacturer's instructions. When primer has dried and cured, cover with a quality exterior grade acrylic latex coating (See Painting Ultrex).

Painting Ultrex

You will need to supply

- Foam paintbrush
- Masking tape
- 320-400 grit sandpaper
- Quality exterior grade acrylic latex paint

Spot test a small area using the following procedures. After the seven to ten day Acrylic latex paint cure time check to see if the paint has adhered to the unit. If the paint has not adhered to the surface, recheck the surface preparation procedures.

1. Thoroughly sand the factory finish with 320-400 grit sandpaper.
2. Wash the surface with water and an approved cleaning solution found at **marvin.com/cleaning** to remove contaminants, rinse with clean water and dry thoroughly.
3. Mask any window components that will not be painted.
4. Coat the Ultrex with a quality exterior grade acrylic latex paint.
5. Acrylic latex products gain full adhesion after seven to ten days cure.

Note: If the finish is scratched, peeled or otherwise compromised down to the Ultrex substrate see 'Repairing Ultrex' section.

Screen Care and Maintenance

The most effective method of cleaning the screens on your windows and doors is to remove the screens, lay them on a flat clean area (such as a sidewalk), and spray off any dust or debris with water from your garden hose. Allow the screens to completely air dry before replacing in the window or door. If you live in a cold climate, it is recommended that in the winter you remove the screen from your doors. The mesh may collect snow and ice, causing it to sag. Please see individual sections for instructions on screen removal.

Note: Certain size screens have a factory bow in the frame; this is to ensure a snug fit and is NOT a defect.

Caution:

Marvin screens are designed to stand up to everyday use. However, these screens were not intended to act as a safety device. Do not allow children to sit on, play on window sills, or to push or fall against window screens, as this could result in a fall through the window or door opening.

Every screen installed on a Marvin product has a non-removable label affixed to it that states:

Warning:

Screen will not stop child from falling out window. Keep child away from open window.

Maintenance, Operation, and General Service

In the following pages you'll find maintenance information on individual Marvin products. Refer to the product illustrations for the names of your particular windows or doors.

Information in this section includes maintenance tips and operational tips, such as removing the window sash. Read completely through the instructions before beginning to work on your windows to make sure you have any necessary tools and parts.

Exterior finishes on doors can be cared for in the same manner as Marvin windows. See interior and exterior maintenance information. Take care with your door's sill – make sure you prevent damage by not getting any paint, solvent, or chemicals on sills. See individual door sections for any specialized sill care.

If you are having problems not explained in this manual, or if the solution seems inappropriate for your problem, contact your local Marvin retailer.

When contacting your Marvin retailer, it may be helpful to provide them with the *"Glass Part Number"* etched on the upper right corner of the glass.

Casement

Operation and Maintenance

The roto-gear is the operating mechanism that crank to open and close casement and awning windows. Casement locks seal the window tightly closed. Excessive cranking when closing window does not improve the seal and may damage roto-gear.

Roto-gears should be lubricated once a year with white lithium grease (available at any hardware store) to keep operation smooth. The hinge joints and locking mechanism should be lubricated on occasion with a silicone based spray. Be sure to clean off all dirt, debris or sand before lubricating.

Caution:

Excessive lubrication may cause damage to the window's finish. Make sure that any excess is immediately removed.

The sash tracks should be occasionally cleaned out with a soft bristle brush. If the casement window is less than 24 1/4" (622 mm) in width, roto-gear arms and assembly may differ from those shown.

Removing and Installing the Screen

To remove casement/awning screen, grasp screen plungers. Pull plungers to release. Tilt screen toward you, and lift screen from channel. To install casement/awning screen, reverse above procedure.

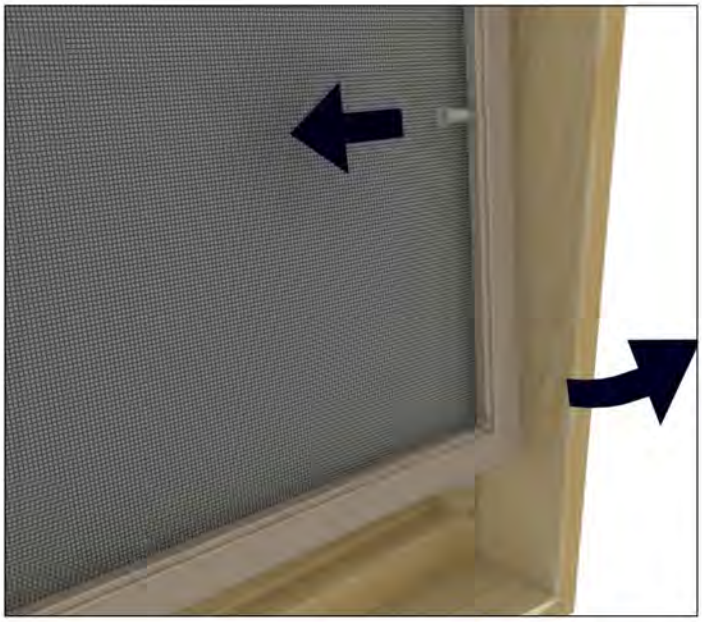

Awning

Operation and Maintenance

Awning hinges, roto-gear operator arms, and sash guides can be oiled with a few drops of light household oil or silicone spray. Operating hardware should be lubricated during your annual inspection. Simply crank open the window and lubricate hardware with white lithium grease. Interior and exterior finishes can be cared for in the same manner as any other Marvin® product.

Caution:

Excessive lubrication may cause damage to the window's finish. Make sure that any excess is immediately removed.

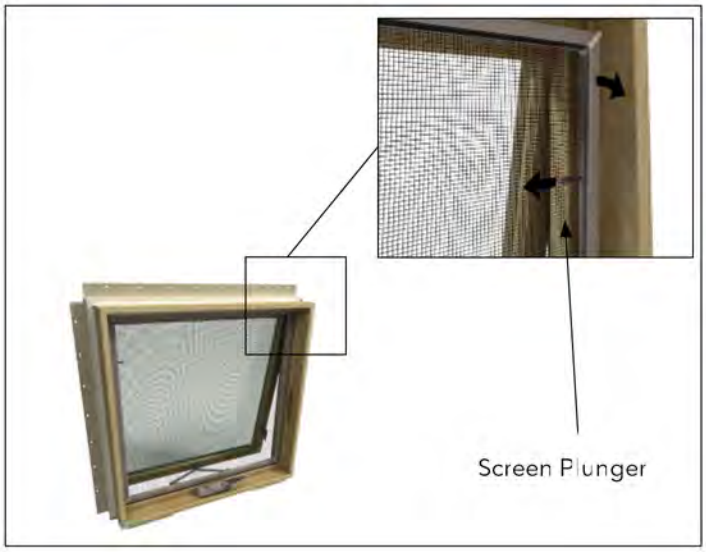

Essential Casement and Awning Screen Removal

To remove Essential Casement/Awning screen, lift the screen at the bottom to compress the springs at the top. Pull the bottom of the screen out and remove from frame.

Note: Essential product shown.

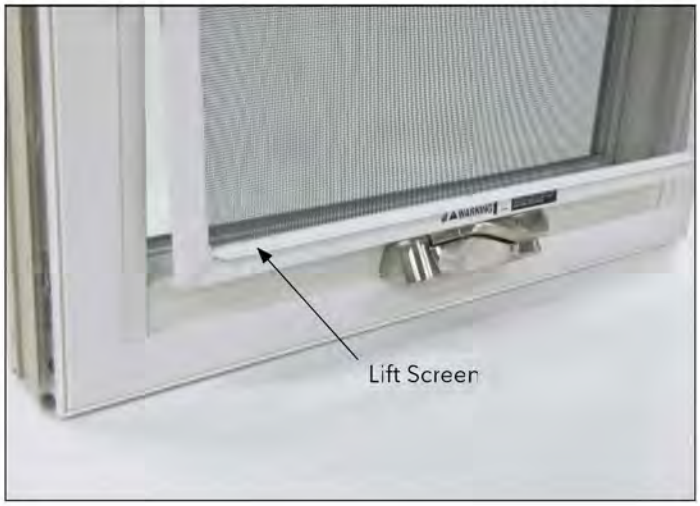

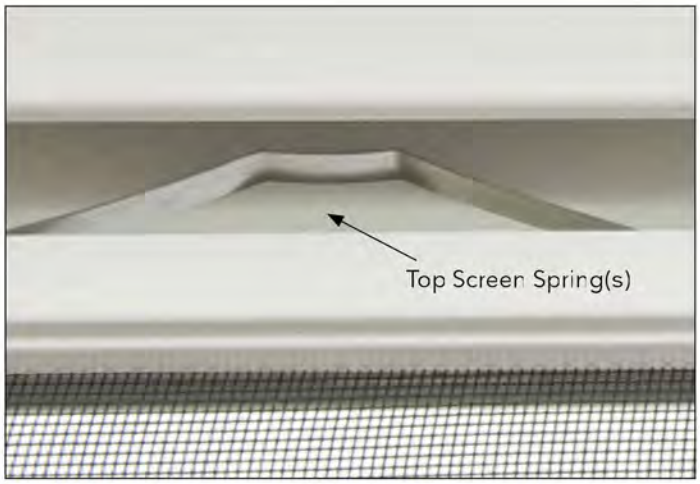

Double Hung

Operation and Maintenance

Periodically clean the jamb liners where the sash slides. Keep them dirt and grease free by washing with a gentle dish detergent. Check the exterior caulking on your double hung windows annually.

How to Tilt Double Hung Sash (for ease of cleaning)

1. To tilt the bottom sash inward, unlock and raise the sash about 3" (76 mm). Grasp both tilt latches (found on the check rail), slide inward and tilt the sash toward you to a horizontal position. See illustrations below.

2. To tilt the top sash inward, lower the sash about 6" (152 mm). Grasp both tilt latches (found on the top rail), slide inward and tilt the sash toward you to a horizontal position. See illustrations below.

How to Remove the Double Hung Sash

1. To completely remove the sash from the frame, hold the sash at 90 degrees to the frame as shown. Release the sash pivot pins from the clutch assemblies by first raising the entire sash 1"-2" (25-51 mm). Then raise just one side of the sash further until the sash pivot pins clear the jambs, remove to interior.

Installing a Double Hung Sash

1. To install the top sash, hold the sash horizontally at 90 degrees to the frame. Guide the sash pivot pins into the exterior sash track or the jambs above the clutch assemblies, lower both sash pins onto the clutch cams making sure the bottom of the sash is level when pins are completely engaged. Slide each tilt latch release toward the center of the unit and gently release the sash into position. Release each latch into the exterior sash track, lower the sash slightly then raise to the fully closed position. Check operation of sash.

2. To install the bottom sash repeat the installation procedure used for installing the top sash. Utilize the interior sash track and lower sash into the closed position, check operation of sash and lock.

Removing the Double Hung Screen

To remove the screen to the interior, grasp the lower screen pullers and pull to release as shown in illustration. Push screen outward and pull down slightly. Turn the screen sideways and bring into dwelling.

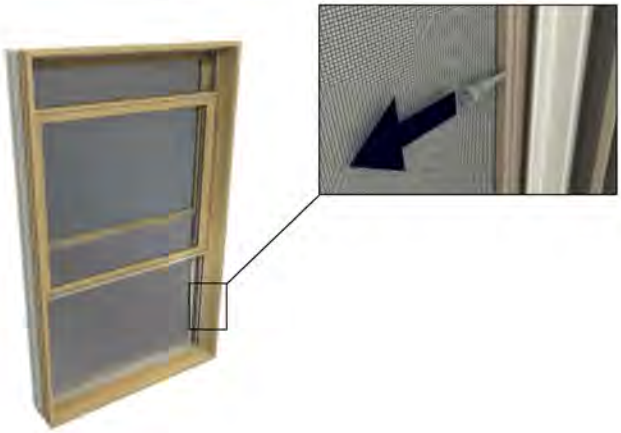

Resetting a Slipped Clutch Assembly

Caution:

Clutches are under extreme spring tension.

Measure the clutch dimension from sill or the opposing balance assembly for the same sash and temporarily mark that dimension on the jamb carrier that contains the released clutch, must be within 1/8" (3 mm). Using a flat screwdriver, rotate the balance clutch cam in the clutch assembly to the released position. Hold the screwdriver firmly and slide the clutch assembly down the jamb carrier to the mark. Rotate the balance clutch cam to the open locked position (cam opening up). Release the screwdriver carefully from the clutch assembly (it must lock in place or damage will occur). Compare clutch heights from the sill for the sash affected. They MUST be within 1/8" (3 mm) of each other or damage may occur when sash are reinstalled, adjust height as needed.

Glider

Operation and Maintenance

Periodically clean the tracks where the sash must slide. Keep them dirt and grease free, and spray them lightly with furniture wax to prevent sticking. Be sure to wipe off any excess wax.

Sash Removal

Slide the operating sash to stationary side of the unit (approximately 2"-3" (51-76 mm) from stationary jamb). With latches depressed, located at the top of the sash, tilt the sash inward until it clears the unit frame; lift the sash off the sill track. To replace the sash, reverse the above procedures.

Note: Only the operating sash of a Glider can be removed from the frame.

Removing and Installing the Screen

To remove the screen grasp and pull forward on both pull tabs and push outward on the screen. Grasp the frame of the screen and pull down slightly on the screen until it clears the screen channel. Turn the screen sideways and bring it in through the bottom sash opening. To replace the screen reverse the above procedure.

Replace the screen with the operator sash completely open and position the screen on the exterior of the window with the springs toward the meeting stile of the unit. Making sure the springs are seated in the screen channel, pull on side tabs until the screen clears the frame. Pull screen in toward the interior until the jamb stile of the screen aligns with screen channel; release pin.

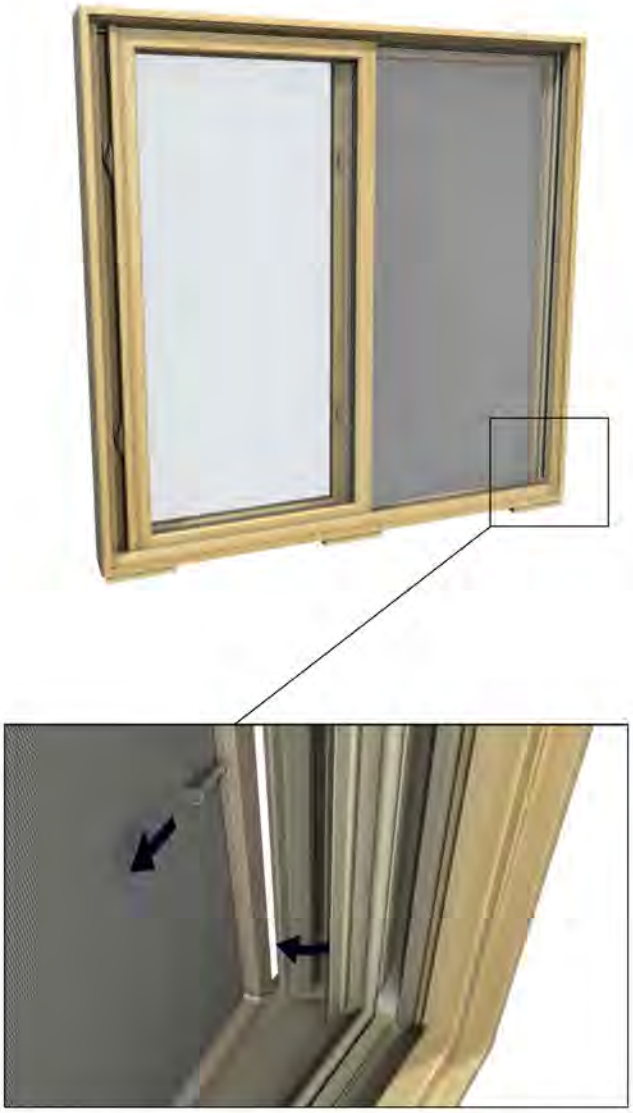

Note: Pull pin away from frame, then push out.

Patio and Sliding French Doors

Operation and Maintenance

The Patio and Sliding French Doors require very little maintenance to keep them functioning efficiently. Most problems can be eliminated by keeping the sill clean, ensuring smooth door operation. Chemicals, solvents, paints and other harsh substances should never come in contact with the sill. Remove any paint, grease, or caulk with 50% isopropyl alcohol. Door handles can be wiped down with a damp cloth to remove fingerprints and smudges.

It is very seldom that door rollers, lock, and hinges require lubrication. Occasionally use spray lubricant to keep operation smooth (rollers are visible underneath the operator panel). If you live in a cold climate, it is recommended that you remove the screen door in the winter. The screen mesh may collect snow and ice, causing it to sag.

OXXO Operation

Opening - unlock the primary operator panel from the secondary operator panel, slide open. To unlock the secondary operator panel flip the two actuators, then slide open.

Closing - shut the secondary operator panel first, then flip the two actuators. The secondary operator panel must be locked before trying to shut and lock the primary operator panel.

Removing the Screen

To remove the screen panel, unlock and partially open the screen door. From the exterior, pry the screen panel guide up with a putty knife starting at one corner. Pull the guide off the track working your way toward the other end. Once the bottom of the screen panel is completely released from the sill track, pivot the bottom of the screen out and push the top of panel approximately 5 degrees toward the head jamb.

This will release the screen panel rollers from the head jamb screen track. Remove the panel from the door.

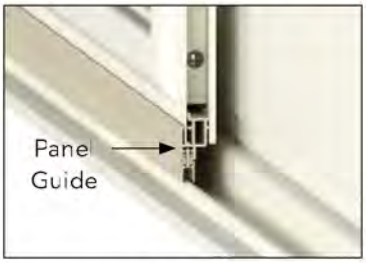

Installing the Screen

To reinstall the screen, hold the screen panel with the top rollers facing you. While tilting the bottom of the screen panel away from the door, lift the rollers into the screen track and pull the panel toward your body to engage the rollers in the track. Make sure the rollers are seated in the track by moving the screen panel back and forth. Once you are sure the rollers are fully seated, pivot the screen panel into position toward the sill and place the bottom screen panel guide into the sill track by lifting it with your fingers or by lifting with a stiff putty knife.

The screen can be adjusted from the interior by loosening or tightening the top roller screw nearest the locking jamb. Adjust the screen so that it is parallel to the locking jamb or casing. An even reveal should be achieved along the entire height of the jamb.

Removing Sliding Door Panels

Removing door panels is a relatively complicated procedure. If you need them removed, please contact your Marvin retailer for a service person to remove the panel for you, or reference our detailed installation or panel removal instructions online at **marvin.com**.

Swinging French Door

Operation and Maintenance

The French door requires very little maintenance. To maintain its appearance, wash with a mild soap and water solution.

Remove fresh paint splashes, grease or caulk with 50% isopropyl alcohol. If door panels need to be removed for moving or other reasons, please contact your Marvin® retailer for either detailed instructions or for a service person to remove the panel for you.

Keep the sill weep area clear of debris and sealants.

Handle Operation for Multi-Point Lock

Always close and lock your passive panel first and the operating panel (with thumb turn) second. Marvin's multi-point hardware has locking bolts at the head and base of the door. Lifting the handle 45 degrees upward will set the head and foot bolts in place for a secure seal. A 90 degrees turn of the key from the outside or the thumb turn on the inside will lock the dead bolt in the handle assembly. When the dead bolt is unlocked, downward pressure on the handle will release the bolts to latch and the door will open. Securely locking by engaging the dead bolt, head and foot bolts; using only one or the other does not offer full security.

Unlocked Position

Head Bolt Retracted

Locked Position

Head Bolt Engaged

Hinge Adjustment Procedure

Note: (Inswing door shown) For Outswing door view panel clearance from exterior.

It may be necessary to make minor adjustments to your Marvin Inswing French Door after it has been permanently installed, the adjustable hinge system allows for adjustments to be made.

IMPORTANT: Adjustable hinges are not intended to compensate for an improperly installed unit.

- Adjustment should only be made when panel misalignment is visible or causes poor operation of door/lock. Make any adjustments in small increments, check results, readjust or proceed as required.

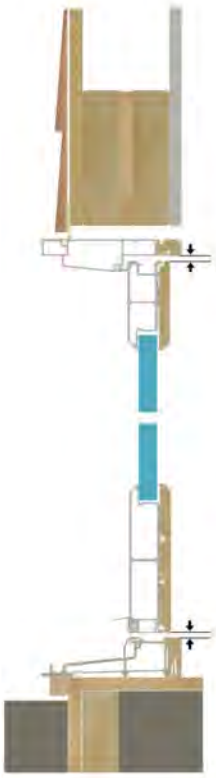

2. Check panel clearance at sill and head jamb. The panel should have 1/8-5/32" (3-4 mm) clearance at head jamb and 5/16-3/8" (8-10 mm) at bottom and 1/8-5/32" (3-4 mm) at side. Align panel vertically as needed by rotating the hinge adjustment screw with a 5/32" hex key, starting with the bottom hinge and working towards the top hinge. Repeat the process as necessary adjusting one rotation at a time. Check results, readjust or proceed as required. See illustration.

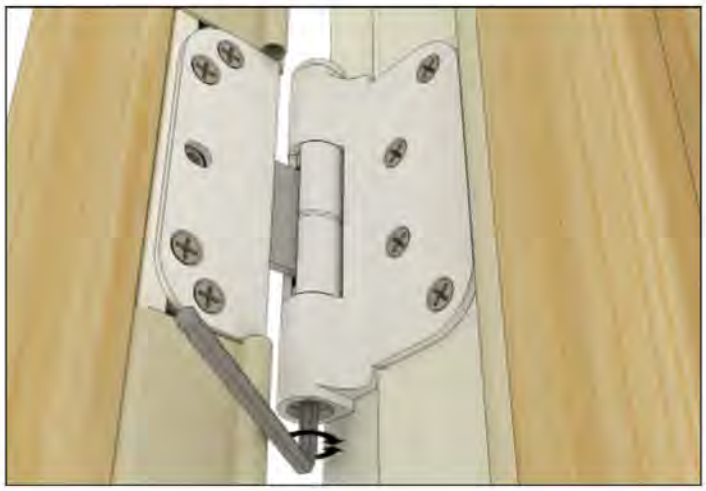

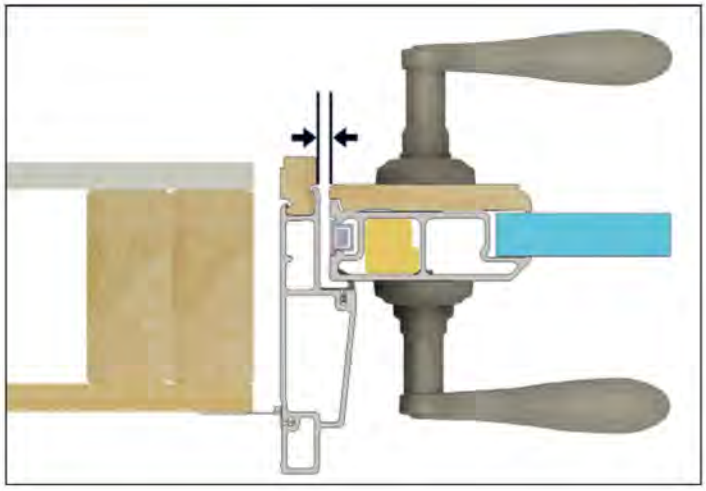

3. Check alignment with locking jamb; panel should have 3/16" (5 mm) clearance along the jamb. Rotate horizontal adjustment screw clockwise to increase, counterclockwise to decrease jamb/panel clearance at the appropriate hinge (i.e. if increasing clearance at top, bottom hinge may have to be adjusted to decrease clearance to avoid hinge binding. See illustration.

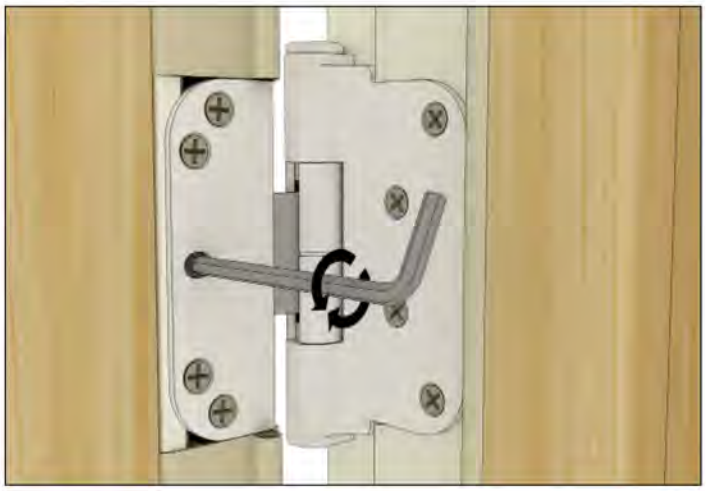

4. After panel alignment is corrected, recheck latch and deadbolt operation.

Inswing Door

Screen Removal

In cold climates, removal of the screen door is recommended during winter months to avoid snow and ice from collecting, causing the mesh to sag. To remove the swinging screen door, first open the active screen panel and disconnect the auto closer. Remove the #6 x 1/2" screw attaching the closer to the head jamb bracket. Then remove the hinge pins from the active screen panel hinges, remove the panel from the hinges and store. On XX configurations, open the passive screen panel and remove the hinge pins in the same manner as the active.

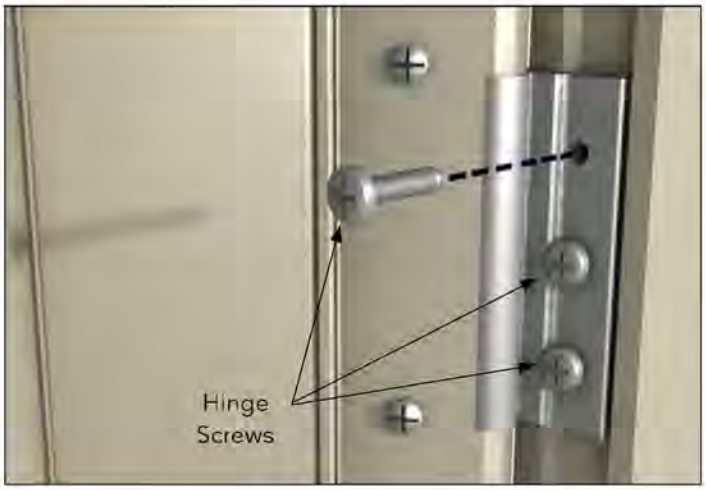

Adjust Closer Tension

Adjust the closer tension on an swinging screen doors by loosening the two screws attaching the door bracket to the screen panel. Slide the bracket and closer left or right as needed and tighten screws. Adjust the closer speed by tightening or loosening the adjusting screw located at the rear of the cylinder assembly.

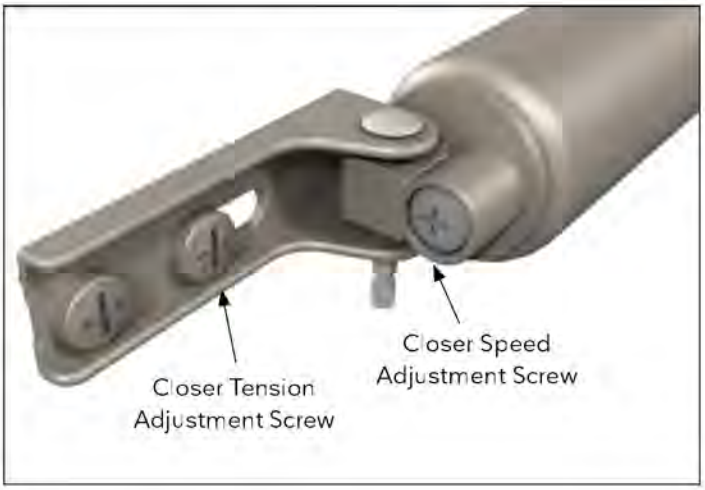

Care of PVD Finishes

Hardware with a Physical Vapor Deposition (PVD) Finish

PVD finished products have undergone a state of the art process known as Physical Vapor Deposition. A layer of hard-wearing metals are deposited onto the solid brass substrate which means it has been given a tough finish to resist fading and discoloration by direct sunlight, humidity, and most other environmental factors, even in coastal areas.

To help retain the appearance of PVD products for many years to come, a little periodic maintenance is required to remove any atmospheric deposits from the surface of the product.

- Once every two months clean the surface of the product thoroughly with a soft cloth moistened with light soapy water.
- To remove heavier deposits, an approved cleaning solution found at **marvin.com/cleaning** may be used with a moistened cloth. Remove traces of water and cleaner and dry thoroughly with a soft cloth.
- When using any proprietary cleaner always follow the advice given by the manufacturers in handling cleaning materials.

Do not use any abrasive cleaning materials or solvents when cleaning PVD products.

MARVIN

Since we opened as a family-owned and -operated lumber and cedar company in 1912, Marvin has designed products to help people live better. We remain committed to bringing beauty and simplicity into people's lives with windows and doors that stand the test of time.

MARVIN.COM

Part #19970255 March 2020

Section 08 54 00
Elevate® Double Hung Insert

Part 1 General

1.1 Section Includes

A. Elevate® Double Hung Insert window complete with hardware, glazing, weather strip, insect screen, grilles-between-the-glass, simulated divided lites, and standard or specified anchors, trim and attachments

1.2 Related Sections

A. Section 01 33 23 – Submittal Procedures: Shop Drawings, Product Data, and Samples

B. Section 01 62 00 – Product Options

C. Section 01 65 00 – Product Delivery

D. Section 01 66 00 – Storage and Handling requirements

E. Section 01 71 00 – Examination and Preparation

F. Section 01 73 00 – Execution

G. Section 01 74 00 – Cleaning and Waste Management

H. Section 01 76 00 – Protecting Installed Construction

I. Section 06 22 00 – Millwork: Wood trim other than furnished by window manufacturer

J. Section 07 92 00 – Joint Sealants: Sill sealant and perimeter caulking

K. Section 09 90 00 – Paints and Coatings: Paint or stain other than factory-applied finish

1.3 References

A. American Society for Testing and Materials (ASTM):

1. E283: Standard Test Method for Rate of Air Leakage through Exterior Windows, Curtain Walls and Doors.

2. E330: Standard Test Method for Structural Performance of Exterior Windows, Curtain Walls, and Doors by Uniform Static Air Pressure Differential.

3. E547: Standard Test Method for Water Penetration of Exterior Windows, Curtain Walls, and Doors by Cyclic Static Air Pressure Differential.

4. E2190: Standard Specification for Insulating Glass Unit Performance and Evaluation.

5. C1036: Standard Specification for Flat Glass.

6. F2090-17: Standard Specification for Window Fall Prevention Devices with Emergency Escape (Egress) Release Mechanisms.

7. E90-09: Standard Test Method for Laboratory Measurement of Airborne Sound Transmission Loss of Building Partitions and Elements.

B. Window and Door Manufacturer's Association (WDMA): I.S.4: Industry Standard for Water Repellent Preservative Treatment for Millwork.

C. Sealed Insulating Glass Manufacturer's Association / Insulating Glass Certification Council (SIGMA / IGCC).

D. American Architectural Manufacturer's Association/Window and Door Manufacturer's association/Canadian Standards Association (AAMA/WDMA/CSA):

1. AAMA/WDMA/CSA 101/I.S.2/A440-08: NAFS – North American Fenestration Standard /Specification for windows, doors, and unit skylights.

2. AAMA/WDMA/CSA 101/I.S.2/A440-11: NAFS – North American Fenestration Standard/Specification for windows, doors, and unit skylights.

E. Window and Door Manufacturer's Association (WDMA): Hallmark Certification Program.

F. American Architectural Manufacturer's Association (AAMA): 624-10: Voluntary Specification, Performance Requirements and Test Procedures for Organic Coatings on Fiber Reinforced Thermoset Profiles.

G. National Fenestration Rating Council (NFRC): 101: Procedure for Determining Fenestration Product Thermal Properties.

1.4 System Description –

A. Design and Performance Requirements:

Product	Air Tested to psf	Water Tested to psf	Certification Rating	Design Pressure (DP)	Max Overall Width		Max Overall Height	
					in	mm	in	mm
Elevate Double Hung Insert	1.57	6.06	LC-PG40-H	DP40	42 3/32	(1069)	84	(2134)
Elevate Double Hung Insert	1.57	5.3	LC-PG35-H	DP35	54	(1372)	84	(2134)
Elevate Double Hung Insert Transom	1.57	6.06	LC-PG40-FW	DP40	62	(1575)	24	(610)
Elevate Double Hung Insert Picture	1.57	6.06	LC-PG40-FW	DP40	58	(1473)	84	(2134)
Elevate Double Hung Insert Picture	1.57	6.06	LC-PG40-FW	DP40	62	(1575)	80	(2032)

1.5 Submittals

A. Shop Drawings: Submit shop drawings under provision of CSI MasterFormat Section 01 33 23.

B. Product Data: Submit catalog data under provision of CSI MasterFormat Section 01 33 23.

C. Samples:

1. Submit corner section under provision of CSI MasterFormat Section 01 33 23.

2. Specified performance and design requirements under provisions of CSI MasterFormat Section 01 33 23.

D. Quality Control Submittals: Certificates: submit manufacturer's certification indicating compliance with specified performance and design requirement under provision of CSI MasterFormat Section 01 33 23.

1.6 Quality Assurance

A. Requirements: consult local code for IBC [International Building Code] and IRC [International Residential Code] adoption year and pertinent revisions for information on:

1. Egress, emergency escape and rescue requirements.

2. Basement window requirements.

3. Windows fall prevention and/or window opening control device requirements

1.7 Delivery

A. Comply with provisions of CSI MasterFormat Section 01 65 00.

B. Deliver in original and protect from weather.

1.8 Storage and Handling

A. Prime and seal wood surfaces, including to be concealed by wall construction, if more than thirty (30) days will expire between delivery and installation

B. Store window units in an upright position in a clean and dry storage area above ground to protect from weather under provision of Section 01660.

1.9 Warranty

The following limited warranty is subject to conditions and exclusions. There are certain conditions or applications over which Marvin has no control. Defect or problems as a result of such conditions or applications are not the responsibility of Marvin. For a more complete description of the Marvin limited warranty, refer to the complete and current warranty information available at http://www.marvin.com/support/warranty.

A. Clear insulating glass with stainless steel spacers is warranted against seal failure caused by manufacturing defects and resulting in visible obstruction through the glass for twenty (20) years from the original date of purchase. Glass is warranted against stress cracks caused by manufacturing defects from ten (10) years from the original date of purchase.

B. Hardware and other non-glass components are warranted to be free from manufacturing defects for ten (10) years from the original date of purchase.

Part 2 Products

2.1 Manufactured Units

A. Elevate® Double Hung Insert and related stationary units as manufactured by Marvin Windows and Doors, Fargo, North Dakota.

2.2 Frame Description

A. Interior: Clear pine interior surfaces.

1. Kiln-dried to moisture content of six to twelve (6-12) percent at the time of fabrication.

2. Water repellant preservative treated in accordance with WDMA I.S.4.

B. Exterior: Fiberglass reinforced (Ultrex®), 0.080” (2mm) thick.

C. 8° bottom for installation over existing sloped sills and 8 degree sloped top.

D. Frame width: 3 1/4” (83mm).

2.3 Sash Description

A. Clear pine interior surfaces.

1. Kiln-dried to moisture content of six to twelve (6-12) percent at the time fabrication.

2. Water repellant preservative treated in accordance with WDMA I.S.4.

B. Exterior: Pultruded reinforced fiberglass (Ultrex®), 0.070” – 0.080” (2mm) thick.

C. Composite sash thickness: 1 17/32” (39mm).

D. Operating sash tilt to interior for cleaning or removal.

E. Sash Options:

1. Equal or Unequal Sash.
2. Cottage Style: Sash divided 2/5 over 3/5.
3. Reverse Cottage Style: Sash divided 3/5 over 2/5.

2.4 Glazing

A. Select quality complying with ASTM C1036. Insulating glass SIGMA/IGCC certified to performance level CBA when tested in accordance with ASTM E2190. STC/OITC ratings are certified to the level in accordance with ASTM E90-09.

B. Glazing method: 11/16” (17mm) Insulating glass.

C. Glass type: Low E1, E2, E3, E3/ERS air or Argon gas

D. Glass type option: Obscure, California Fire Glass (Annealed exterior and tempered interior glazing configuration), Rain Glass, Glue Chip, Narrow Reed, Reed, Frost, Bronze Tint, Gray Tint, Green Tint.

E. Glazing seal: Silicone bedding at exterior and interior.

F. Glazing Option: STC/OITC upgrade.

2.5 Finish

A. Exterior: Pultruded Fiberglass.

1. Factory baked on acrylic urethane.
2. Meets AAMA 624-10 requirements.
3. Color: Stone White, Pebble Gray, Bronze, Evergreen, Cashmere, Ebony.

B. Interior: Pine wood.

1. Treated bare wood.
2. Factory Finish: White, Clear interior, Designer Black.

2.6 Hardware

A. Balance System: Coil spring block and tackle with nylon cord and glass filled nylon shoe and zinc locking clutch.

B. Lock: High pressure zinc die-cast cam lock and keeper.

1. Finish: Phosphate coated and electrostatically painted.

2. Standard Colors: Almond Frost, White, Matte Black.

3. Optional Colors: Bright Brass, Satin Nickel and Oil Rubbed Bronze.

4. Two locks on units over 42 3/32” (1069mm) frame width.

C. Top and Bottom Tilt Latches: Ergonomic tilt latches attached to the upper corner of the top and bottom sash for easy tilting and sash removal.

1. Top Sash Latch color: Beige.

2. Bottom Sash Latch color: matches hardware color.

D. Factory Installed Window Control Device for operating units per ASTM F2090-17: a system consisting of an acetal lever housed in an acetal shell on each stile of the top sash.

1. Available on all sizes.

2. Color: Beige, White, Black.

E. Optional Sash Lift

1. Zinc die cast contoured sash lift.

2. Color: Almond Frost, White, Bright Brass, Satin Nickel, Oil Rubbed Bronze, Matte Black.

2.7 Weather Strip

A. Weather strip is beige, white, or black in color. Jamb weather strip is a robust covered foam weather strip that is inserted into a rigid vinyl jamb carrier and used to seal sash to jambs. An additional jamb weather strip is inserted into Ultrex/wood and seals bottom sash to jamb. Parting stop is vinyl with a flexible leaf seal to seal between the header and the upper sash. Check rail weather strip is a hollow bulb. Bottom sash weather strip is attached to the sash and interfaces against the Ultrex sill and jamb weather strip. Picture and transom units have a hollow bulb weather strip that is inserted into rigid vinyl jamb carrier and head jamb carrier to seal sash.

2.8 Insect Screen

A. Factory-installed full screen

1. Screen mesh, 18 by 16: Charcoal fiberglass (non-corrosive).

B. Factory-installed half screen

2. Screen mesh, 18 by 16: Charcoal fiberglass (non-corrosive).

C. Roll formed aluminum frame

1. Color: to match exterior Ultrex® frame color.

2.9 Simulated Divided Lites (SDL)

A. 7/8” (22mm) wide. Available with optional spacer bars

1. Exterior muntins: Ultrex finished to color match exterior

2. Interior muntins: Bare Pine wood or optional white, clear interior, or designer black interior finish

3. Patterns:
    a. Rectangular
    b. 9 lite Prairie cut with 4” DLO corners
    c. 6 lite top or bottom Prairie cut with 4” DLO corners
    d. 6 lite left or right Prairie cut with 4” DLO corners
    e. Cottage style up to 2H with specified DLO height (4” min)
    f. Size limitations may apply to Prairie and Cottage lite cut availability

4. Simulated Check rail option: 2 11/32” (60mm). Available with optional spacer bars.
    a. Picture Units Only

2.10 Grilles-Between-the–Glass (GBG)

A. Manufactured from aluminum in an 23/32” (18mm) wide contoured profile placed between the two panes of glass.

B. Colors:

1. Interior: White, bronze, black

2. Exterior: White, Pebble Gray, Bronze, Evergreen, Cashmere, or Ebony

C. Pattern:

1. Rectangular

2. 9 lite Prairie cut with 4” DLO corners

3. 6 lite top or bottom Prairie cut with 4” DLO corners

4. 6 lite left or right Prairie cut with 4” DLO corners

5. Cottage style up to 2H with specified DLO height (3” min)

6. Size limitations may apply to Prairie and Cottage lite cut availability

2.11 Accessories and Trim

A. Installation Accessories:

1. Through jamb installation kit.

2. Mullion kit: Standard mullion kit for field assembly of related units available in vertical. Kit includes: Instructions, aluminum pins, sealant foam tape, interior mullion trim, exterior mullion cover, and mullion foam block.

Part 3 Execution

3.1 Examination

A. Verification of Condition: Before installation, verify openings are plumb, square and of proper dimensions as required in CSI MasterFormat Section 01 71 00. Report frame defects or unsuitable conditions to the General contractor before proceeding.

B. Acceptance of Condition: Beginning on installation confirms acceptance of existing conditions.

3.2 Installation

A. Comply with CSI MasterFormatSection 01 73 00.

B. Assemble and install window/door unit(s) according to manufacturer's instruction and reviewed shop drawing.

C. Install sealant and related backing materials at perimeter of unit or assembly in accordance with CSI MasterFormat Section 07 92 00 Joint Sealants. Do not use expansive foam sealant.

D. Install accessory items as required.

E. Use finish nails to apply wood trim and mouldings.

3.3 Field Quality Control

A. Remove visible labels and adhesive residue according to manufacturer's instruction.

B. Unless otherwise specified, air leakage resistance tests shall be conducted at a uniform static pressure of 75 Pa (~1.57 psf). The maximum allowable rate of air leakage shall not exceed 2.3 L/sm^2 (~0.45 cfm/ft^2).

C. Unless otherwise specified, water penetration resistance testing shall be conducted per AAMA 502 and ASTM E1105 at 2/3 of the fenestration products design pressure (DP) rating using "Procedure B" – cyclic static air pressure difference. Water penetration shall be defined in accordance with the test method(s) applied.

3.4 Cleaning

A. Remove visible labels and adhesive residue according to manufacturer's instruction.

B. Leave windows and glass in a clean condition. Final cleaning as required in CSI MasterFormat Section 01 74 00.

3.5 Protecting Installed Construction

A. Comply with CSI MasterFormat Section 07 76 00.

B. Protecting windows from damage by chemicals, solvents, paint or other construction operations that may cause damage.

End of Section

Attachment 12

Elevate Double Hung Insert

Unit Features

Elevate Double Hung Insert: ELDHIN
Elevate Double Hung Insert Picture: ELDHINP
Elevate Double Hung Insert Transom: ELDHINT

For applicable certification and code information, refer to the Introduction and Product Performance chapter.

Frame and Sash:

- The frame and sash exteriors are made of Ultrex®.
- Exterior colors: Stone White, Pebble Gray, Bronze, Evergreen, Cashmere, or Ebony. Frame and sash color may be selected independently.
- The interior is non finger-jointed pine, kiln dried to a moisture content of 6-12% at time of fabrication. Water-repellent, preservative treated.
- Interior wood is available as Pine bare wood or factory-applied white, clear, or designer black finishes. Frame and sash color may be selected independently.

Frame:

- Composite frame thickness is 1 13/16", (46). Frame width is 3 1/4", (83). Sloped sill with 8 degree bevel. Non finger-jointed pine interior frame liner is applied to all units. Ultrex is .075" (2) thick. Sloped sill with 8 degree bevel.

Sash:

- Composite sash thickness is 1 17/32" (39). Ultrex is .070" (2) thick. Sash can be replaced but cannot be re-glazed.

Hardware:

- The balance system is a coil spring block and tackle system, with nylon cord and zinc locking clutch.
- Both sash tilt into the room for cleaning or removal for painting without removing the screen.
- High-pressure zinc die cast check rail lock and keeper.
- Lock employs a cam-lock mechanism.
  - Color: Almond Frost, White, or Matte Black. Optional Bright Brass, Oil Rubbed Bronze, and Satin Nickel.
- Each sash employs spring loaded tilt latches to allow for easy tilting or sash.
- On units 42 3/32" (1069) and wider, two locks are mounted.
- Optional factory applied Window Opening Control Device is available on all sizes. A system consisting of an acetal lever housed in an acetal shell on each stile of the top sash. This device works in accordance to ASTM F2090-17 standard specification for window fall prevention devices with emergency escape.
  - Color: White, Beige, or Black.
- Optional field-applied flush-mounted, die-cast sash lift.
  - Available Colors: Almond Frost, White, Bright Brass, Satin Nickel, Oil Rubbed Bronze, and Matte Black finishes.

Installation:

- Operator
  - Secure the jambs with minimum of two #8 x 3" pan head screws.
  - Maximum spacing of jambs not to exceed 3/16".
  - Secure the head jamb with either zero or two #8 x 3" pan head screws.
- Picture:
  - Secure the jambs with minimum of two #8 x 3" pan head screws.
  - Maximum spacing of jambs not to exceed 3/16".
  - Secure the head jamb with two #8 x 3" pan head screws.

Glazing:

- All units are manufactured with an 11/16" (17) IG with Low E1, E2, E3, or E3/ERS coatings including argon gas or air fill. Clear (uncoated) glass available with air fill only.
  - Tripane not available.
- Tempered glass and/or obscure glass, and California Fire glass (annealed exterior and tempered interior glazing configuration) are available as an option.
- The glazing seal is a silicone bedding on both interior and exterior surfaces utilized in a sandwich style sash.
- STC/OITC values are available for 3.1 mm glass thickness.
  - Optional 3.1/4.7 STC/OITC Upgrade glass is available. See the Product Performance chapter for STC and OITC ratings.
- Decorative glass options include glue chip, rain, reed, narrow reed, frost, and tinted (bronze, gray or green). Decorative glass is not available with Low E1, Low E3/ERS, or STC/OITC Upgrade options.

Unit Features Continued

Weather Strip:

- All units are dual weather stripped.
- All weather strip is beige, black, or white in color.
- Jamb weather strip is a robust fabric covered foam weather strip that is inserted into a rigid vinyl jamb carrier and used to seal sash to jambs. An additional jamb weather strip is inserted into Ultrex/wood and seals bottom sash to jamb.
- Parting stop is vinyl with a flexible leaf seal to seal between the header and the upper sash.
- Check rail weather strip is a hollow bulb.
- Bottom rail extension has a hollow bulb weather strip that interfaces against the Ultrex sill and jamb weather strip.
- Picture and transom units is a hollow bulb weather strip that is inserted into rigid vinyl jamb carrier and head jamb carrier to seal sash.

Screen:

- Full screen is standard. Half-screen option is available.
- Roll formed aluminum frame with corner key construction
  - Color to match exterior frame color
- Charcoal color fiberglass (non-corrosive) screen cloth.
- Spring loaded pins for installation.

Interior / Exterior Simulated Divided Lites (SDL):

- Interior bar: 7/8" (22) wide bars
  - Pine non finger-jointed wood, factory-applied white, clear, and designer black finishes
- Exterior bar: 7/8" (22) wide bars Ultrex, finish to match exterior
  - Patterns available: Rectangle, Cottage style cut, 9 lite Prairie cut or 6 lite Prairie for top sash, bottom sash, or both.
- Available with or without aluminum interior spacer bar in airspace.
- ITDHP Only: Simulated check rail option: 2 11/32" (60).
  - Patterns available: simulated rail in standard center or customer specified location with 7/8" (22) patterns above, below or both in patterns of rectangular equal lite or prairie lite cut.
- SDL spacer bars are available.
- Not available with rain, reed and narrow reed decorative glass patterns. Glue chip pattern requires tempered glass. Tinted glass available without spacer bar only.

Grilles-Between-The-Glass (GBG):

- 23/32" (18) contoured aluminum bar placed between two panes of glass
- Pattern: Standard rectangular pattern, 6 or 9 lite Prairie cut, or Cottage style cut
  - Exterior colors: Stone White, Pebble Gray, Bronze, Evergreen, Cashmere, or Ebony
  - Interior Colors: White, Bronze, or Black.
- Not available with tinted glass.

NOTE: NFRC values are now located on www.marvin.com.

Minimum and Maximum Guidelines

Unit Type		Min IO Width		Min IO Height		Max IO Width		Max IO Height		Glass Size	
		in	mm	in	mm	in	mm	in	mm	Sq. Feet	Sq. Meters
ELDHIN	Insulating Glass	18 3/8	(467)	28 1/8	(714)	54 3/8	(1381)	84 1/4	(2140)	26 3/64	2.420
ELDHIN TR	Insulating Glass	18 3/8	(467)	16 1/8	(410)	62 3/8	(1584)	24 1/4	(616)	7 3/16	0.668
ELDHIN P	Insulating Glass	18 3/8	(467)	23 5/8	(600)	58 3/8	(1483)	84 1/4	(2140)	28 41/64	2.661
ELDHIN P	Insulating Glass	18 3/8	(467)	23 5/8	(600)	62 3/8	(1584)	80 1/4	(2038)	29 1/4	2.717
ELDHIN-C*	Insulating Glass	18 3/8	(467)	36 1/8	(918)	54 3/8	(1381)	68 1/4	(1734)	23 11/32	2.169
ELDHIN-RC**	Insulating Glass	18 3/8	(467)	36 1/8	(918)	54 3/8	(1381)	68 1/4	(1734)	23 11/32	2.169

*NOTE: Special Size Cottage and Reverse Cottage Style ELDHIN units are available in frame sizes; width of 18 to 54 and height of 36.5 to 68.5. The Height Ratio being .402/.598 (*Cottage Style) or .598/.402 (**Reverse Cottage Style).*

NOTE: Special Sizes are available in 1/64" (0.4) increments, not to exceed the frame size measurement maximum or minimum in the table above.

Certified Sizes and Ratings

Product	Air Tested to psf	Water Tested to psf	Certification Rating	Design Pressure (DP)	Max Overall Width		Max Overall Height	
					in	mm	in	mm
ELDHIN	1.57	6.06	LC-PG40-H	DP40	42.093	(1069)	84	(2134)
ELDHIN	1.57	5.30	LC-PG35-H	DP35	54	(1372)	84	(2134)
ELDHIN TR	1.57	6.06	LC-PG40-FW	DP40	62	(1575)	24.5	(622)
ELDHIN P	1.57	6.06	LC-PG40-FW	DP40	58	(1473)	84	(2134)
ELDHIN	1.57	6.06	LC-PG40-H	DP40	42.093	(1069)	84	(2134)
ELDHIN-C*	1.57	6.06	LC-PG40-H	DP40	42.093	(1069)	68.5	(1740)
ELDHIN-C*	1.57	5.30	LC-PG35-H	DP35	54	(1372)	68.5	(1740)
ELDHIN-RC**	1.57	6.06	LC-PG40-H	DP40	42.093	(1069)	68.5	(1740)
ELDHIN-RC**	1.57	5.30	LC-PG35-H	DP35	54	(1372)	68.5	(1740)

* Cottage Style unit

** Reverse Cottage Style unit

Egress Formulas

Elevate Double Hung Insert Egress Unit Minimum Opening Conversion From Frame Size		
Minimum Value for Net Clear Opening	**Desired Dimension**	**Formula**
20 Inches	Egress Opening Width (Inches)	= Frame OM Width – 3.656
24 Inches	Egress Opening Height (Inches)	= (Frame OM Height/2) – 5.488
5.7 Square Feet	Egress Opening Area (SQFT)	= (Egress Width x Egress Height) / 144

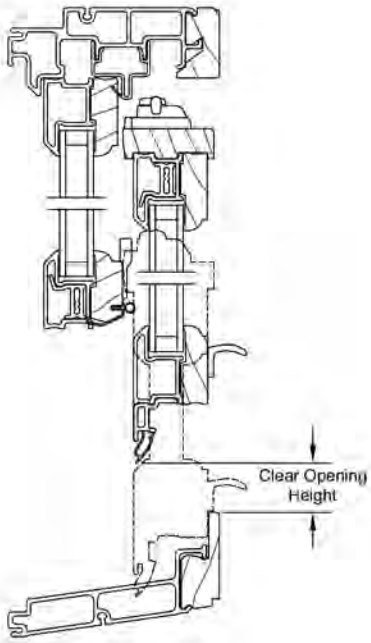

Head Jamb and Sill

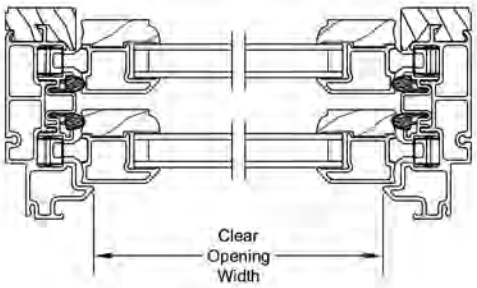

Jamb

Measurement Conversions

Elevate Double Hung Insert						
Unit Measurements		Width		Height		
From	To					
Daylight Opening		**in**	**mm**		**in**	**mm**
Daylight Opening	Bottom Sash OM	+ 3 1/4	(83)		+ 3 1/4	(83)
Daylight Opening	Top Sash OM	+ 3 1/4	(83)		+ 3 1/4	(83)
Daylight Opening	Glass OM	+ 1 1/16	(27)		+ 1 1/16	(27)
Daylight Opening	Full Screen OM	+ 3 13/16	(97)	X 2	+ 7 9/32	(185)
Daylight Opening Bottom Sash	Half Screen OM	+ 3 13/16	(97)		+ 4 1/32	(102)
Daylight Opening	Frame OM @ Exterior	+ 6 23/64	(161)	X 2	+ 9 1/8	(232)
Inside Opening		**in**	**mm**		**in**	**mm**
Inside Opening	Bottom Sash OM	-3 15/32	(88)	÷ 2	-1 1/8	(29)
Inside Opening	Top Sash OM	-3 15/32	(88)	÷ 2	-1 1/8	(29)
Inside Opening	Daylight Opening	-6 47/64	(171)	÷ 2	-4 3/8	(111)
Inside Opening	Glass OM	-5 43/64	(144)	÷ 2	-3 5/16	(84)
Inside Opening	Full Screen OM	-2 29/32	(74)		-1 15/32	(37)
Inside Opening	Half Screen OM	-2 29/32	(74)	÷ 2	-11/32	(09)
Inside Opening	Frame OM @ Interior	-3/8	(10)		-1/4	(06)
Inside Opening	Frame OM @ Exterior	-3/8	(10)		+ 3/8	(10)

Elevate Double Hung Insert Transom					
Unit Measurements		Width		Height	
From	To				
Daylight Opening		**in**	**mm**	**in**	**mm**
Daylight Opening	Sash OM	+ 3 1/4	(83)	+ 3 1/4	(83)
Daylight Opening	Glass OM	+ 1 1/16	(27)	+ 1 1/16	(27)
Daylight Opening	Frame OM @ Exterior	+ 6 11/32	(161)	+ 6 13/16	(173)
Inside Opening		**in**	**mm**	**in**	**mm**
Inside Opening	Sash OM	-3 15/32	(88)	-3 3/16	(81)
Inside Opening	Daylight Opening	-6 23/32	(171)	-6 7/16	(163)
Inside Opening	Glass OM	-5 21/32	(144)	-5 3/8	(137)
Inside Opening	Frame OM @ Interior	-3/8	(10)	-1/4	(06)
Inside Opening	Frame OM @ Exterior	-3/8	(10)	+ 3/8	(10)

Elevate Double Hung Insert		
IO to Frame Size Height		
Existing Sill Angle	Conversions	
8° and greater	3/8	(10)
7°	5/16	(8)
6°	3/16	(5)
5°	1/8	(3)
4°	1/16	(2)
3°	0	()
2°	-1/8	(3)
1°	-3/16	(5)
0°	-1/4	(6)

NOTE: All conversions are based off of an existing 8+ degree sill. Please refer to the chart on the right for additional existing angle inside opening to frame size height conversions.

Measurement Conversions - Field Measurement

Conversion from Field Measurement to Frame OM		
Width		
Condition	Formula	
If blind stop width is 1/2 inch or less	ELDHIN frame OM width = inside opening width - 0.375	
Height		
Condition	Type of Sill	Formula
If old sill angle is 8 degrees or more but less than 14 degrees	8 degree bottom sill	ELDHIN frame OM height = inside opening height + 0.375

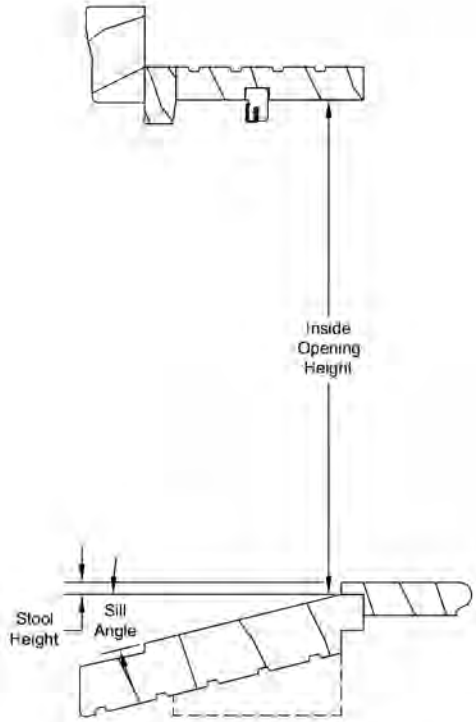

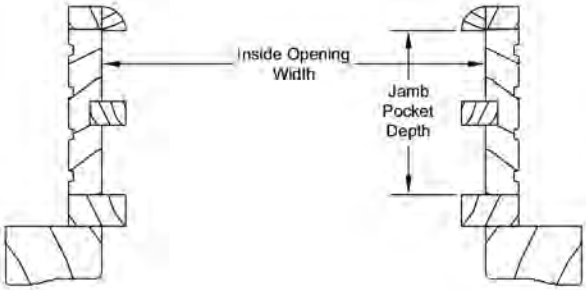

Elevate Double Hung Insert		
IO to Frame Size Height		
Existing Sill Angle	Conversions	
8° and greater	3/8	(10)
7°	5/16	(8)
6°	3/16	(5)
5°	1/8	(3)
4°	1/16	(2)
3°	0	()
2°	-1/8	(3)
1°	-3/16	(5)
0°	-1/4	(6)

Mulling Guidelines

Multiple assemblies can be factory mulled: up to 5 units wide by 1 unit high.

MAXIMUM INSIDE OPENING not to exceed 112 7/8" (2867) x 84 1/4" (2140).

NOTE: Field mulling beyond the above limitations is not recommended.

Calculating Total Inside Opening for Assemblies

- **WIDTH: ADD Frame Widths + 3/8" (10)**
  - Tolerance = 3/16" (10) from frame to Inside Opening at left and right jamb.

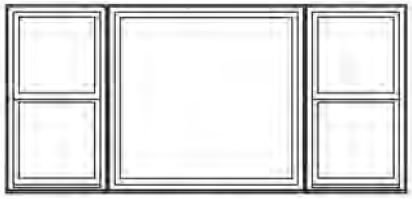

3 Units Wide 1 Unit High

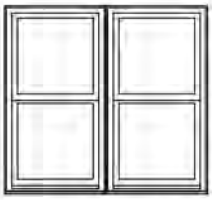

2 Units Wide 1 Unit High

Section Details: Operating (Interior Install)

Scale: 3" = 1' 0"

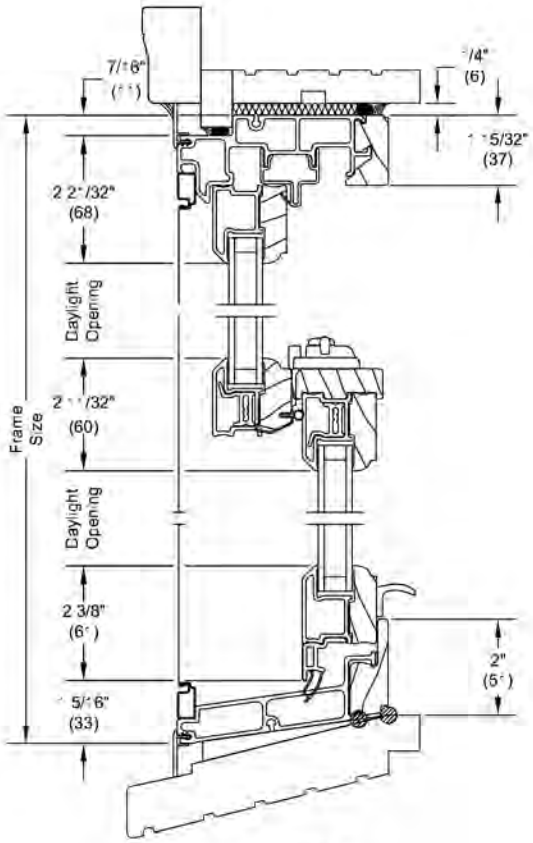

Head Jamb and Sill
8 Degree Bevel Sill
Installed in Existing Frame

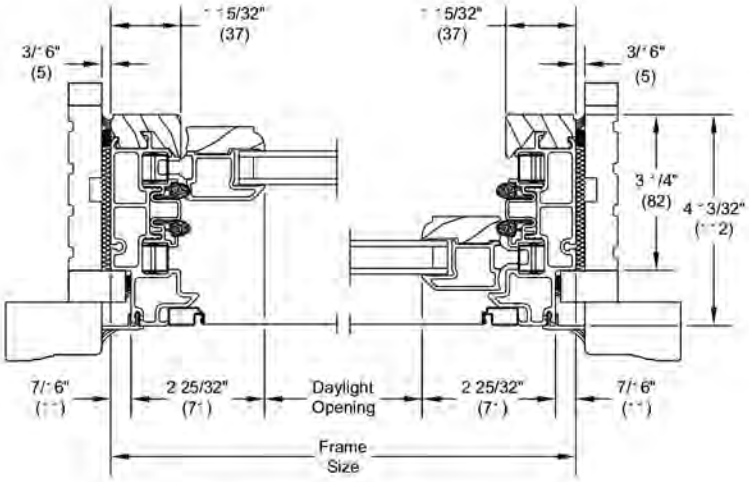

Jamb
Installed in Existing Frame

Section Details: Operating (Exterior Install)

Scale: 3" = 1' 0"

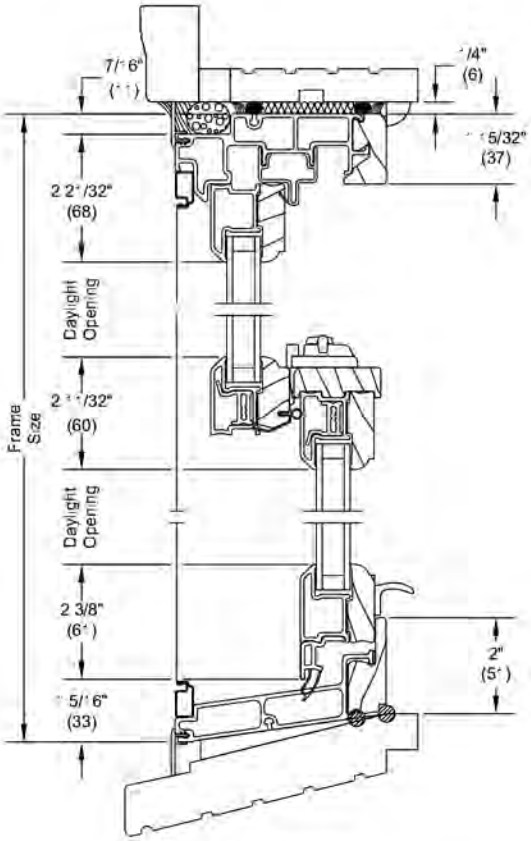

Head Jamb and Sill
8 Degree Bevel Sill
Installed in Existing Frame

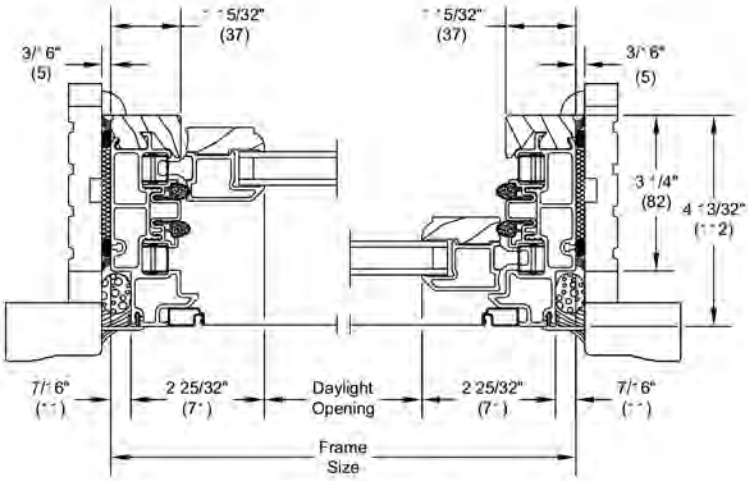

Jamb
Installed in Existing Frame

Section Details: Picture/Transom (Interior Install)

Scale: 3" = 1' 0"

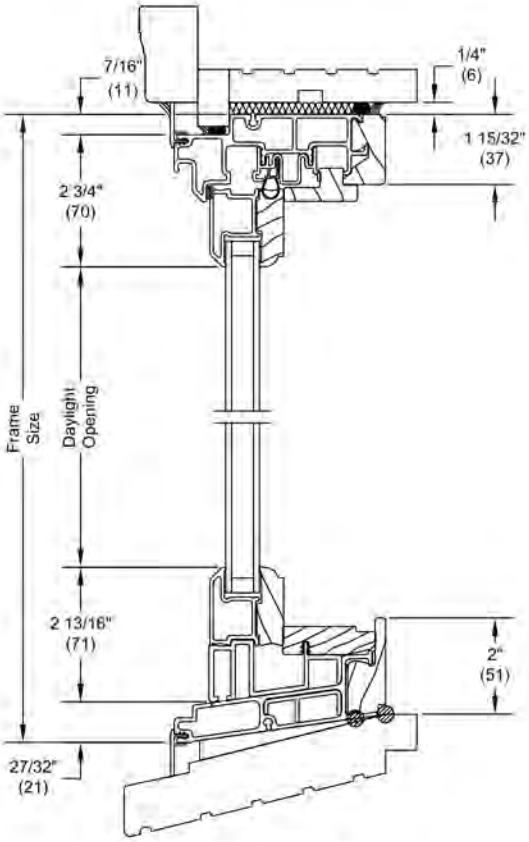

Head Jamb and Sill
8 Degree Bevel Sill
Installed in Existing Frame

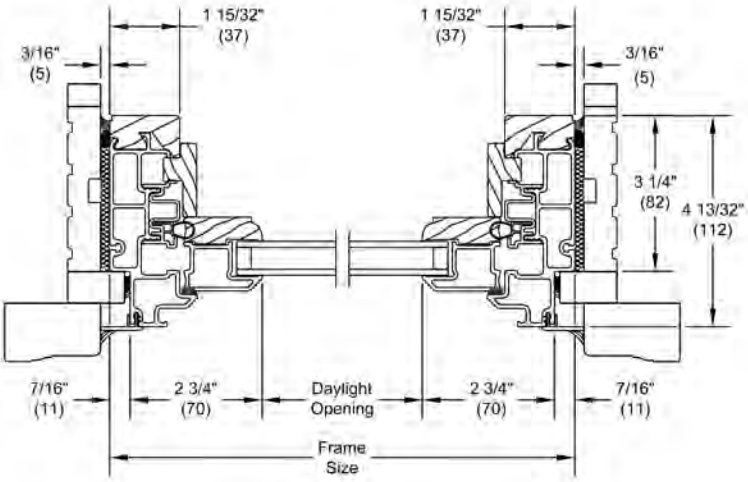

Jamb
Installed in Existing Frame

Section Details: Picture/Transom (Exterior Install)

Scale: 3" = 1' 0"

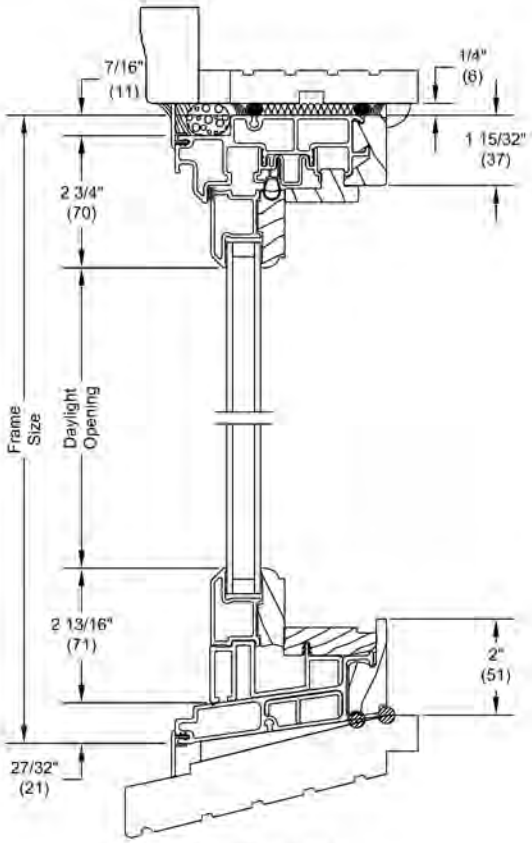

Head Jamb and Sill
8 Degree Bevel Sill
Installed in Existing Frame

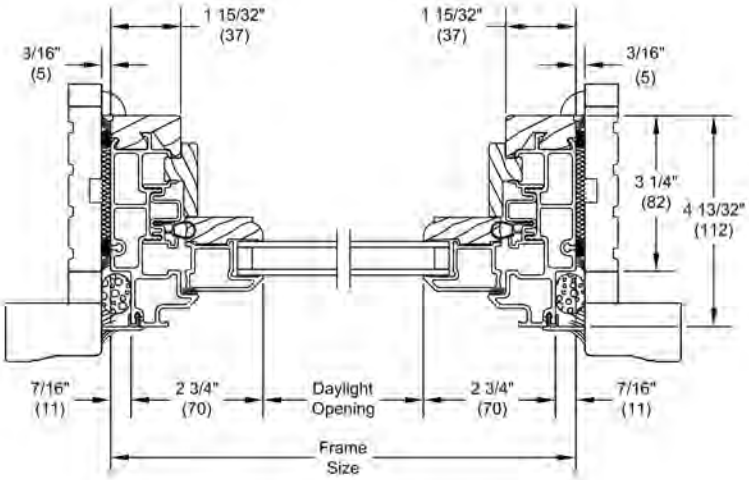

Jamb
Installed in Existing Frame

Section Details: Mullions

Scale: 3" = 1' 0"

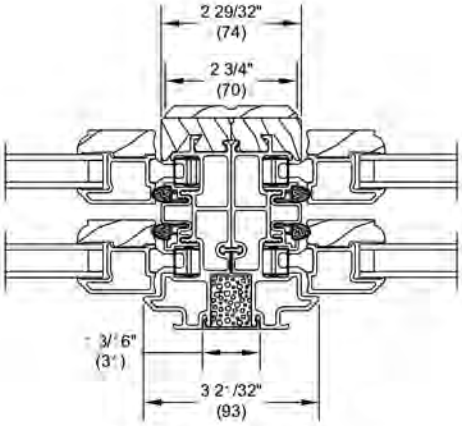

Operator/Operator

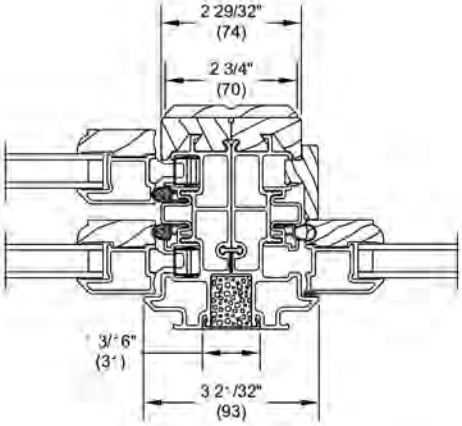

Operator/Picture

Section Details: Frame Expander

Scale: 3" = 1' 0"

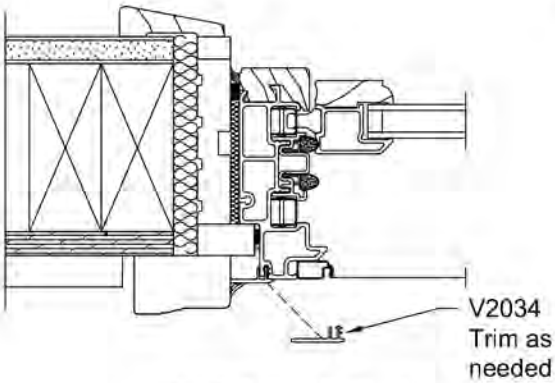

Jamb Frame Expander

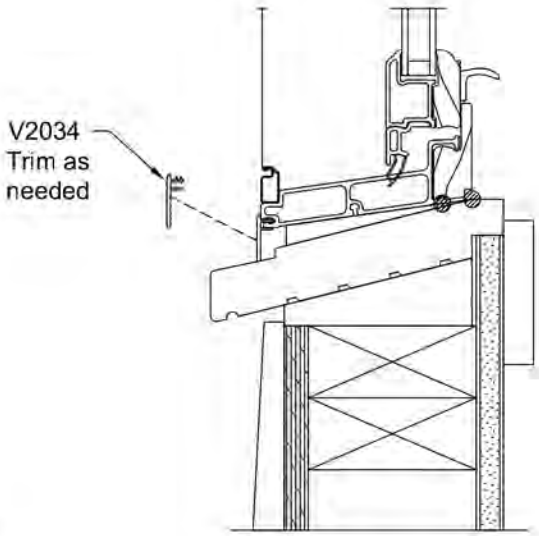

Sill Frame Expander

Divided Lite Options (Not to scale)

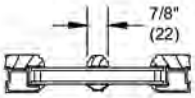

Wood SDL Without Spacer Bar

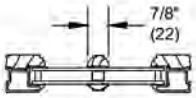

Wood SDL With Spacer Bar

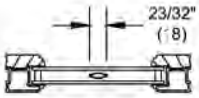

Aluminum Grille Between Glass

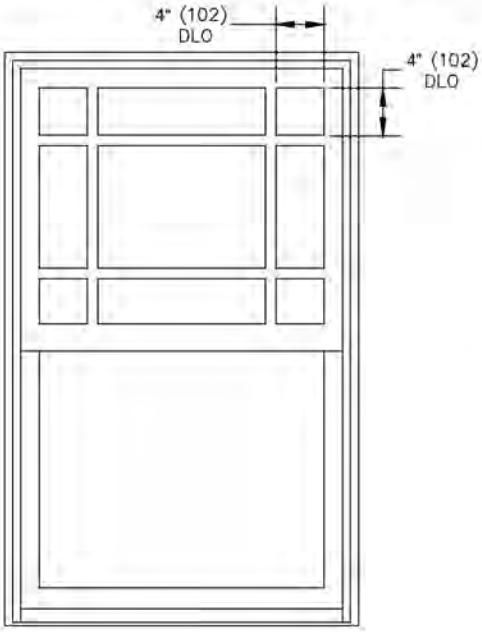

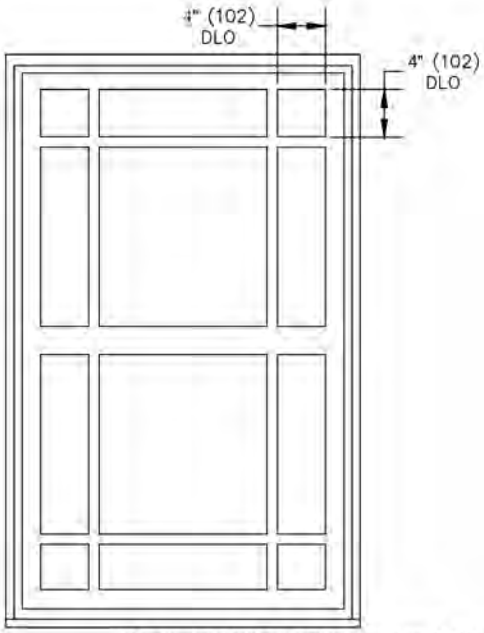

*Optional 6 lite Prairie cut for GBG or SDL

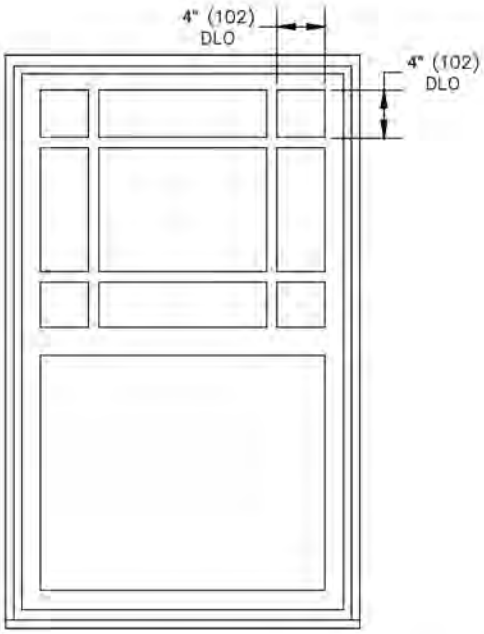

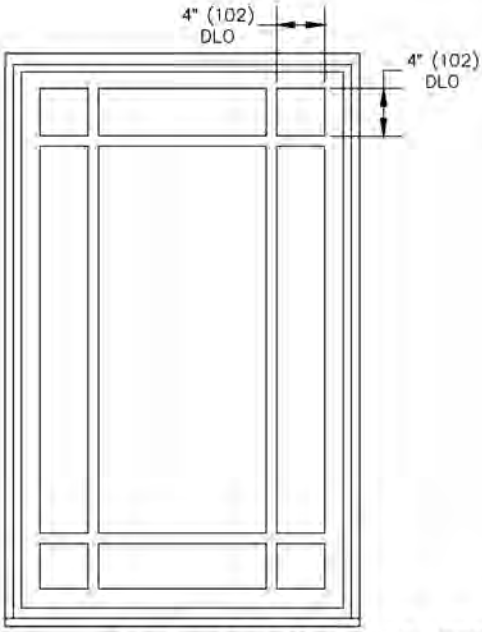

*Optional 9 lite Prairie cut for GBG or SDL

NOTE: 4" (102) DLO lite cut minimum for 7/8" (22) pattern

Divided Lite Options

Double Hung Insert SDL, GBG Equal Lite Cut						
Product	Width			Height		
	Frame Width		Lite Cut Pattern	Frame Height		Lite Cut Pattern
	in	mm		in	mm	
ELDHIN	18	(457)	2W	28 1/2	(724)	2H
	26 3/32	(663)	3W	72 1/2	(1842)	3H
	38 3/32	(968)	4W			
	50 3/32	(1272)	5W			
ELDHIN P	18	(457)	2W	16 1/2	(419)	1H
	26 3/32	(663)	3W	24 1/2	(622)	2H
	38 3/32	(968)	4W	28 1/2	(724)	4H
	50 3/32	(1272)	5W	72 1/2	(1842)	6H
ELDHIN-C*	18	(457)	2W	TOP SASH		2H
	26 3/32	(663)	3W			
	38 3/32	(968)	4W	BOTTOM SASH		3H
	50 3/32	(1272)	5W			
ELDHIN P-RC*	18	(457)	2W	TOP SASH		3H
	26 3/32	(663)	3W			
	38 3/32	(968)	4W	BOTTOM SASH		2H
	50 3/32	(1272)	5W			

*ELDHIN-C (Cottage Style) and **ELDHIN-RC (Reverse Cottage Style) units are available in frame heights of 36 1/2" to 68 1/2' only. Sash ratio is .402/.598 for Cottage Style units and .598/.402 for Reverse Cottage Style units.

NOTES:

- *When frame width or height are between two sizes, refer to the smaller size shown for the default lite cut pattern.*
- *Rectangle GBGs for special size units will default to the next smaller standard size lite pattern. Also available will be Prairie patterns, Cottage patterns, and customer specified equal rectangular lite patterns.*
- *Rectangular SDL for special size units will default to the next smaller standard size lite pattern. Also available will be Prairie patterns, Cottage patterns, and customer specified equal rectangular lite patterns.*
- *Prairie GBG and SDL available in 9 lite and 6 lite top, bottom, left, and right patterns.*
- *Cottage GBGs and SDL for special size units will default to the next smaller standard size lite pattern. Cottage GBGs and SDL are also available in customer selected lite patterns.*
- *Maximum number of lites wide and high for equal lite SDL option is 11 lites.*
- *Minimum DLO measurement for equal lite SDL option is 4" (102) and will be validated by OMS.*
- *Minimum DLO measurement for equal lite GBG option is 3" (76) and will be validated by OMS.*
- *Standard DLO measurement for Prairie GBG and SDL options is 4" (102). Special DLO corners are n/a.*
- *Standard DLO height measurement for Cottage SDL option is 10" (254). Minimum DLO height is 8" (203) for one high pattern. Minimum DLO height is 4" (102) for two high patterns.*
- *Standard DLO height measurement for Cottage GBG option is 10" (254). Minimum DLO height is 3" (76) for one and two high patterns.*
- *Simulated Rail: Rectangular, Prairie 6-Lite and 9-Lite SDL patterns are available with Simulated Rail.*
- *Simulated Rail: Custom ratio and specified DLO are available with Simulated Rail and will be validated by OMS.*