PZ-WETLANDS-23-000001

Menu Reports Help

File Date: 02/03/2023

Application Status: Pending

Assigned To: Carlos Cruz

Description of Work: Construction of Synthetic Surface Running Track, Synthetic Turf Athletic Field, and Associated Field Event Throwing Vectors.

Application Detail: Detail

Application Type: Wetlands Permit

Documents:

File Name	Document Group	Category	Description	Type	Docum
059815-Univ of Hartfor...	PLNG_FLDDEV	Site Plan	Site Plans	application/pdf	Uploac
2023-02-03 Owners Auth...	PLNG_FLDDEV	Owners Authoriz...		application/pdf	Uploac

Show all

Address: 200 Bloomfield AV, HARTFORD, CT 06105

Owner Name: University of Hartford

Owner Address: 200 Bloomfield Ave, West Hartford, CT 06117

Application Name:

Parcel No: 102001001

Contact Info:

Name	Organization Name	Contact Type	Contact Primary Address	Status
Christopher Dupuis		Applicant	Mailing, 200 Bloomfiel...	Active
Christopher Dupuis	University of H...	Owner	Mailing, 200 Bloomfiel...	Active

Licensed Professionals Info:

Primary	License Number	License Type	Name	Business Name	Business License #
Yes	CT	PROFESSIONAL EN...	Peter M Parent		

Job Value: $0.00

Total Fee Assessed: $0.00

Total Fee Invoiced: $0.00

Balance: $0.00

Custom Fields: PLNG_FLDDEV_CF

GIS Information

Zoning District	Zoning Overlay	FEMA Flood Zone	Land Use Per Assessor
MX-2	CAMPUS	AE	PRIVATE COLLEGES/UNIVERSITY

NRZ	Neighborhood	Local Historic District
BLUE HILLS NRZ	BLUE HILLS	_

Historic District	Historic Landmark/Site	State Historic District
_		_

Dispersion met?	Identify Dispersion	National Historic District
Yes	_	_

Development Activities

Filling
√
Dredging

Excavating
√
Grading
√
Clear Cutting
√
Clearing/Grubbing
√
Stream Stabilization

Stream Clearance

Culvering

Impact to Underground Utilitites

Roadway Construction

General Project Information

Is this application a result of a violation notice?
No

Zoning Enforcement Case ID #
–

Is the proposed work in/near the Wetland significant or insignificant?
–

Flood Zone Designation
X

Base Flood Elevation (ft)
–

Additional Information

Is this an application to renew or amend a prior permit
No

Explain alternative sites considered for proposed activity
Expansion of existing Athletic Complex. Work Previously Permitted.

How many years is the permit needed for?
5

Describe the ecological communities & functions of the wetland
–

How does this application change, diminish, or enhance the wetland?
–

Is any portion of the property within 500 ft. of an adjoining municipality?
Yes

Reason for Request

Reason for Request
–

Other Payment Required

Green Infrastructure Fund

Amount
–

City Tree Fund

Amount
–

Complete Streets Fund

Amount
–

Describe Reason for Payments
–

Recommendation

Recommendation
–

Consistency with POCD
–

Adverse Impacts on Neighboring Lands

–

Suitability as Presently Zoned

–

PLNG_FLDDEV_DIGEPLAN
Enhanced Doc List

–

Dates and Notices

Application Received	**Open Hearing Deadline**	**Close Hearing Deadline**
–	–	–
Decision Deadline	**Extensions Requested?**	**If yes, describe how the dates above have**
–		–
Notice sent to NRZ/CRCOG	**Legal Ad #1**	**Legal Ad #2**
–	–	–
Sign Affidavit Received	**Certificate of Mailings Returned**	**Notice of Decision Published**
–	–	–
Recordation Date	**Approval Expiration Date**	**Sign Deposit Check #**
–	–	–
Sign Deposit Date Received	**Sign Deposit Check Amount**	**Public Hearing Date**
–	–	–
Public Hearing Time	**Meeting Link or Location**	**Document Link**
–	–	–

Certificate of Compliance

As-Built Drawing Date	**Type of Bond**	**Escrow Account #**
–	–	–
Bonding Company Name	**Bonding Contact Name**	**Bonding Primary Phone #**
–	–	–
Bonding Email	**Drawings Number of Sheets**	**Drawings Last Revised**
–	–	–

Zoning Compliance

As-Built Drawing Date	**Type of Bond**	**Escrow Account #**
–	–	–
Bonding Company Name	**Bonding Contact Name**	**Bonding Primary Phone #**
–	–	–
Bonding Email		
–		

Prior Approvals

Type of Permit/Authorization	Issued By	Issued Date	Expiration Date

Resolution Clauses

Type	Comment

Workflow Status:

Task	Assigned To	Status	Status Date	Action By
Application Intake	Carlos Cruz			
Plans Distribution				
Utilities Review				
Adjacent Municipalitie...				
City Forester Review				
Planning and Zoning Re...				
Engineering Review				
NRZ				
Greater Hartford Flood...				
Deep Review				
Staff Report				
Public Notice				
Inlands Wetlands Water...				
Notice of Decision				
Appeal Period				
Permit Issuance				
Permit Status				
Certificate of Plannin...				
Case Complete				

Condition Status:

Name	Short Comments	Status	Apply Date	Severity	Action By

Application Comments:

View ID	Comment	Date

Initiated by Product: ACA

Scheduled/Pending Inspections:

Inspection Type	Scheduled Date	Inspector	Status	Comments

February 3, 2023

Hartford Planning & Zoning
260 Constitution Plaza
1ST Floor
Hartford, CT 06103

RE: **Record 23TMP-001008 – Owner's Authorization**

The Owner and Applicant for the Wetland's Permit Application for the proposed Athletic Facility Expansion is the University of Hartford in care of Christopher Dupuis, Assistant Vice President of Capital Planning & Management Facilities. CHA is providing Engineering Services and Permitting Support.

Thank You,

Pete Parent, P.E.

T: 860.885.1055
www.chacompanies.com
400 Capitol Boulevard, Suite 301, Rocky Hill, CT 06067

UNIVERSITY OF HARTFORD TRACK AND FIELD

UNIVERSITY OF HARTFORD PROJECT #01-2023

BID SET

January 13, 2023

University of Hartford
200 BLOOMFIELD AVE
WEST HARTFORD, CT 06117

SITE VICINITY MAP

SCALE: NOT TO SCALE

Sheet Index

Sheet List Table	
Sheet Number	Sheet Title
G-001	COVER SHEET
C-001	EXISTING CONDITIONS PLAN
C-002	EXISTING CONDITIONS PLAN
C-003	DEMOLITION PLAN
C-004	DEMOLITION PLAN
C-101	TRACK AND FIELD LAYOUT PLAN
C-102	TRACK AND FIELD LAYOUT PLAN
C-111	TRACK AND FIELD SURFACING AND DIMENSION PLAN
C-112	TRACK AND FIELD SURFACING AND DIMENSION PLAN
C-201	TRACK AND FIELD GRADING PLAN
C-202	TRACK AND FIELD GRADING PLAN
C-301	TRACK AND FIELD DRAINAGE PLAN
C-302	TRACK AND FIELD DRAINAGE PLAN
C-401	TRACK AND FIELD ENVIRONMENTAL PLAN
C-402	TRACK AND FIELD ENVIRONMENTAL PLAN
C-411	TRACK EROSION AND SEDIMENT CONTROL PLAN
C-412	TRACK EROSION AND SEDIMENT CONTROL PLAN
C-501	TRACK AND FIELD UTILITY PLAN
C-502	TRACK AND FIELD UTILITY PLAN
C-601	SITE DETAILS
C-602	SITE DETAILS
C-603	SITE DETAILS
C-604	SITE DETAILS
C-605	SITE DETAILS
C-606	SITE DETAILS
C-607	BLEACHER DETAILS
A-001	PROJECT DATA, SYMBOLS, & ABBREVIATIONS
A-010	GROUND LEVEL LIFE SAFETY PLAN
A-101	GROUND LEVEL & REFLECTED CEILING PLAN
A-102	ROOF PLAN AND FUTURE UPPER LEVEL PLAN
A-201	EXTERIOR ELEVATIONS
A-301	BUILDING & WALL SECTIONS AND DETAILS
A-501	TOILET & ACCESSIBILITY DETAILS
A-601	DOOR AND ROOM SCHEDULES & DETAILS
A-801	GRANDSTAND PLANS & DETAILS
A-802	PRESS BOX ELEVATIONS
A-803	GRANDSTAND & PRESS BOX SECTIONS
A-804	ENLARGED PRESS BOX PLANS
S-001	STRUCTURAL GENERAL NOTES
S-002	STRUCTURAL SPECIAL INSPECTIONS
S-101	STRUCTURAL FOUNDATION & FRAMING PLANS
S-102	ATHLETIC FIELD RETAINING WALL PLAN & SECTIONS
S-201	FOUNDATIONS SECTIONS & DETAILS
S-202	FRAMING SECTIONS & DETAILS
S-301	TYPICAL CONCRETE SECTIONS & DETAILS
S-302	TYPICAL STEEL SECTIONS & DETAILS
M-001	LEGEND, ABBREVIATIONS, SYMBOLS, AND SCHEDULES
M-101	MECHANICAL PLAN
P-001	LEGEND, ABBREVIATIONS, SYMBOLS, AND SCHEDULES
P-101	POTABLE PLUMBING PLAN
P-102	SANITARY, VENT AND STORM DRAIN PLUMBING PLAN
E-001	ELECTRICAL LEGEND, ABBREVIATIONS AND SYMBOL LIST
E-101	ELECTRICAL SITE PLAN 1 OF 2
E-102	ELECTRICAL SITE PLAN 2 OF 2
E-103	ELECTRICAL PLANS – TRACK STORAGE BUILDING
E-501	ELECTRICAL SCHEDULES AND ONE-LINE DIAGRAM
E-502	ELECTRICAL SCHEDULES
E-701	ELECTRICAL DETAILS
E-702	ELECTRICAL DETAILS

Drawing Copyright © 2020

CHA
300 Corporate Place, Suite 110
Rocky Hill, CT 06067-1861
860.257.4557 | www.chacompanies.com

University of Hartford

IT IS A VIOLATION OF LAW FOR ANY PERSON, UNLESS THEY ARE ACTING UNDER THE DIRECTION OF A LICENSED PROFESSIONAL ENGINEER, ARCHITECT, LANDSCAPE ARCHITECT OR LAND SURVEYOR TO ALTER AN ITEM IN ANY WAY. IF AN ITEM BEARING THE STAMP OF A LICENSED PROFESSIONAL IS ALTERED, THE ALTERING ENGINEER, ARCHITECT, LANDSCAPE ARCHITECT OR LAND SURVEYOR SHALL ATTACH TO THE ITEM THE ADDITION TO THE SEAL NOTATION "ALTERED BY" FOLLOWED BY THEIR SIGNATURE, THE DATE OF SUCH ALTERATION, AND A SPECIFIC DESCRIPTION OF THE ALTERATION.

UNIVERSITY OF HARTFORD
ATHLETIC SPORTS COMPLEX
200 BLOOMFIELD AVE, WEST
HARTFORD, CT 06117

No.	Submittal / Revision	App'd.	By	Date

COVER SHEET

Designed By:	Drawn By:	Checked By:
Issue Date: 1/13/2023	Project No: 59815	Scale:

Drawing No.:
C-001

File: \\CHA-LLP.COM\PROJ\PROJECTS\ANY\AE\059815.000\09_DESIGN\DRAWINGS\01_SHEETS\C-000_COVER.DWG
Saved: 1/12/2023 1:20:43 AM Plotted: 1/12/2023 12:50:41 PM Current User: Kinney, James Last Saved By: 6052

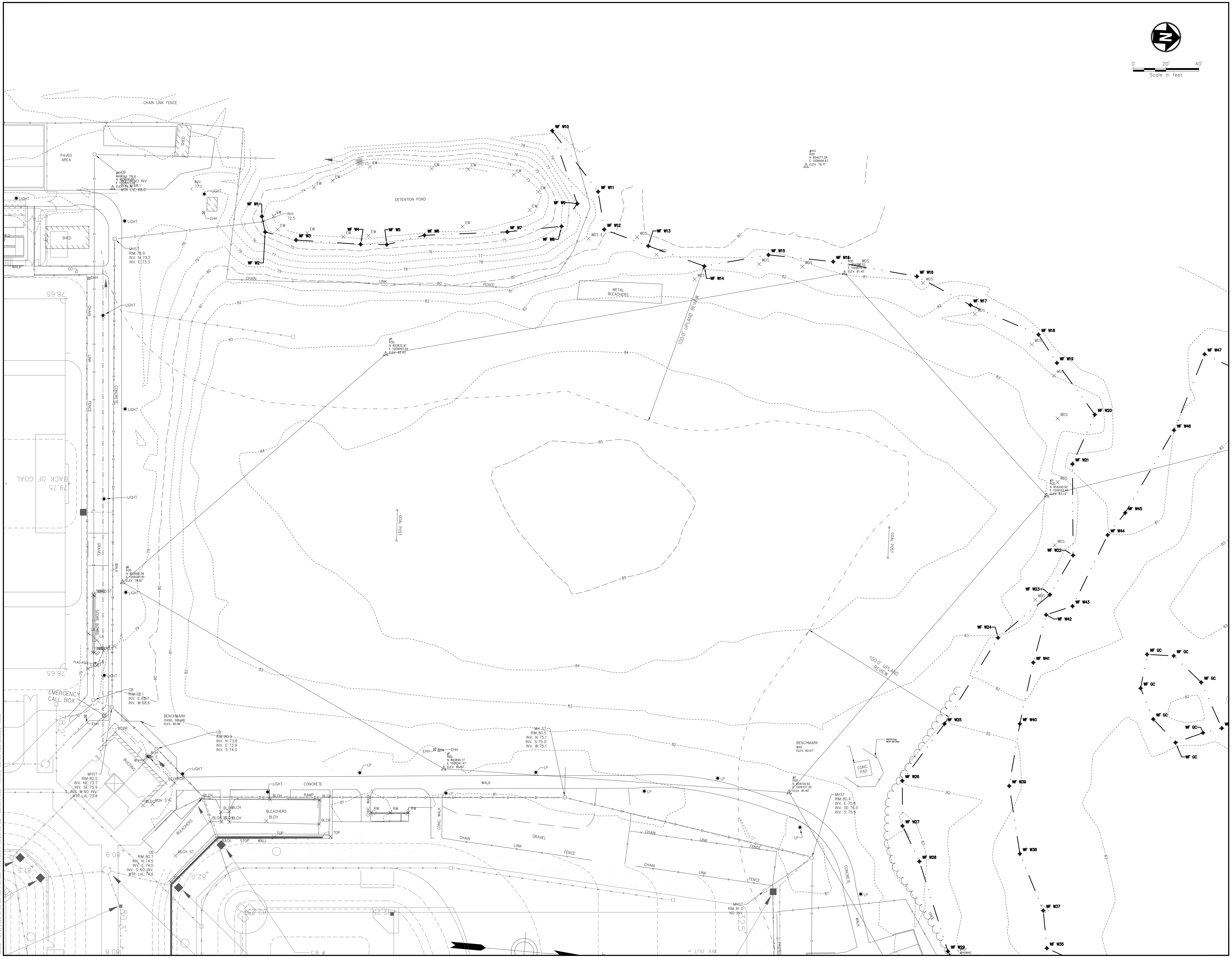

Drawing Copyright © 2020

CHA
200 Corporate Place, Suite 110
Rocky Hill, CT 06067-1861
860.257.4557 . www.chacompanies.com

University of Hartford

IT IS A VIOLATION OF LAW FOR ANY PERSON, UNLESS THEY ARE ACTING UNDER THE DIRECTION OF A LICENSED PROFESSIONAL ENGINEER, ARCHITECT, LANDSCAPE ARCHITECT OR LAND SURVEYOR TO ALTER AN ITEM IN ANY WAY. IF AN ITEM BEARING THE STAMP OF A LICENSED PROFESSIONAL IS ALTERED, THE ALTERING ENGINEER, ARCHITECT, LANDSCAPE ARCHITECT OR LAND SURVEYOR SHALL STAMP THE DOCUMENT AND INCLUDE THE NOTATION "ALTERED BY" FOLLOWED BY THEIR SIGNATURE, THE DATE OF SUCH ALTERATION, AND A SPECIFIC DESCRIPTION OF THE ALTERATION.

UNIVERSITY OF HARTFORD
ATHLETIC SPORTS COMPLEX
200 BLOOMFIELD AVE, WEST HARTFORD, CT 06117

No.	Submittal / Revision	App'd.	By	Date

EXISTING CONDITIONS PLAN

Designed By:	Drawn By:	Checked By:
JP	JK	EO
Issue Date:	Project No:	Scale:
1/13/2023	59815	AS SHOWN

Drawing No.:

C-001

File: \\CHA-LLP.COM\PROJ\PROJECTS\ANY\V6\059815.000\09_DESIGN\DRAWINGS\01-SHEETS\C-001-TR-EXCON.DWG
Saved: 12/22/2022 8:56:18 AM Plotted: 1/12/2023 10:22:48 AM Current User: Kinney, James LastSavedBy: 6052

Drawing Copyright © 2020

CHA
300 Corporate Place, Suite 110
Rocky Hill, CT 06067-1861
860.257.4557 www.chacompanies.com

University of Hartford

IT IS A VIOLATION OF LAW FOR ANY PERSON, UNLESS THEY ARE ACTING UNDER THE DIRECTION OF A LICENSED PROFESSIONAL ENGINEER, TO ALTER AN ITEM IN ANY WAY. IF AN ITEM BEARING THE STAMP OF A LICENSED PROFESSIONAL IS ALTERED, THE ALTERING ENGINEER OR LAND SURVEYOR SHALL STAMP THE DOCUMENT AND INCLUDE THE NOTATION "ALTERED BY" FOLLOWED BY THEIR SIGNATURE, THE DATE OF SUCH ALTERATION, AND A SPECIFIC DESCRIPTION OF THE ALTERATION.

UNIVERSITY OF HARTFORD
ATHLETIC SPORTS COMPLEX
200 BLOOMFIELD AVE, WEST
HARTFORD, CT 06117

No.	Submittal / Revision	App'd.	By	Date

EXISTING CONDITIONS PLAN

Designed By:	Drawn By:	Checked By:
JP	JK	EO
Issue Date:	Project No:	Scale:
1/13/2023	59815	AS SHOWN

Drawing No.:

C-002

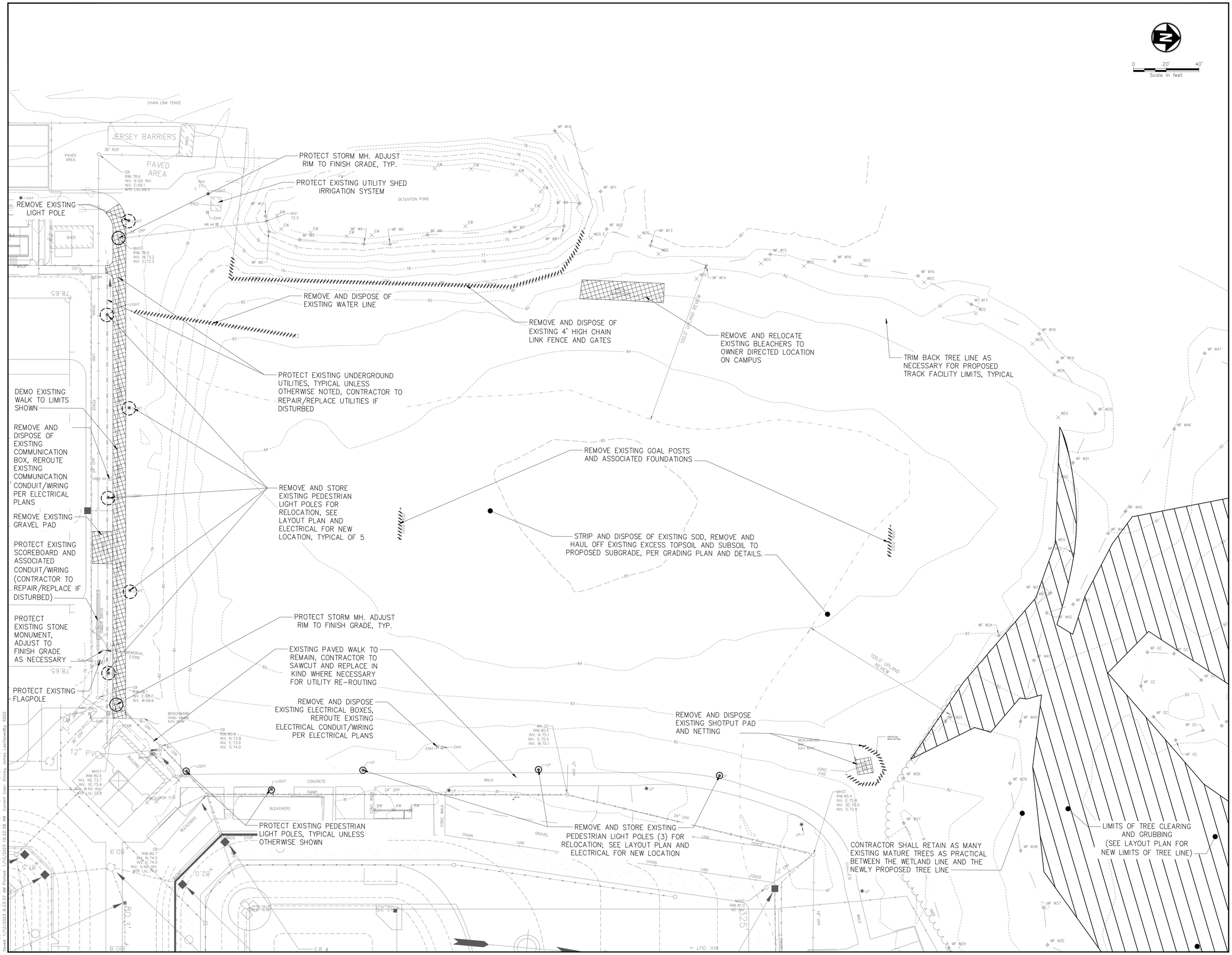

Drawing Copyright © 2020

CHA
350 Corporate Place, Suite 110
Rocky Hill, CT 06067-1861
860.257.8557 . www.chacompanies.com

University of Hartford

IT IS A VIOLATION OF LAW FOR ANY PERSON, UNLESS THEY ARE ACTING UNDER THE DIRECTION OF A LICENSED PROFESSIONAL ENGINEER, ARCHITECT, LANDSCAPE ARCHITECT OF LAND SURVEYOR, TO ALTER AN ITEM IN ANY WAY. IF AN ITEM BEARING THE STAMP OF A LICENSED PROFESSIONAL IS ALTERED, THE ALTERING ENGINEER, ARCHITECT, LANDSCAPE ARCHITECT OF LAND SURVEYOR SHALL AFFIX TO THE ITEM THE PHRASE "ALTERED BY" NOTATION, "ALTERED BY" FOLLOWED BY THEIR SIGNATURE, THE DATE OF SUCH ALTERATION, AND A SPECIFIC DESCRIPTION OF THE ALTERATION.

UNIVERSITY OF HARTFORD
ATHLETIC SPORTS COMPLEX
200 BLOOMFIELD AVE, WEST
HARTFORD, CT 06117

No.	Submittal / Revision	App'd.	By	Date

DEMOLITION PLAN

Designed By:	Drawn By:	Checked By:
JP	JK	EO
Issue Date:	Project No:	Scale:
1/13/2023	59815	AS SHOWN

Drawing No.:
C-003

File: \\CHA-LLP.COM\PROJ\PROJECTS\ANY\K6\059815.000\09_DESIGN\DRAWINGS\01_SHEETS\C-003-TR-DEMO.DWG
Saved: 1/12/2023 9:23:07 AM Plotted: 1/12/2023 10:22:28 AM Garrett Sauer Array, James LastSaved By: 6052

Drawing Copyright © 2020

CHA
350 Corporate Place, Suite 110
Rocky Hill, CT 06067-1861
860.257.8557 . www.chacompanies.com

University of Hartford

IT IS A VIOLATION OF LAW FOR ANY PERSON, UNLESS THEY ARE ACTING UNDER THE DIRECTION OF A LICENSED PROFESSIONAL ENGINEER, ARCHITECT, LANDSCAPE ARCHITECT OR LAND SURVEYOR TO ALTER AN ITEM IN ANY WAY. IF AN ITEM BEARING THE STAMP OF A LICENSED PROFESSIONAL ENGINEER, ARCHITECT, LANDSCAPE ARCHITECT OR LAND SURVEYOR SHALL STAMP THE DOCUMENT AND INCLUDE THE NOTATION "ALTERED BY" FOLLOWED BY THEIR SIGNATURE, THE DATE OF SUCH ALTERATION, AND A SPECIFIC DESCRIPTION OF THE ALTERATION.

UNIVERSITY OF HARTFORD
ATHLETIC SPORTS COMPLEX
200 BLOOMFIELD AVE, WEST
HARTFORD, CT 06117

No.	Submittal / Revision	App'd.	By	Date

DEMOLITION PLAN

Designed By:	Drawn By:	Checked By:
JP	JK	EO
Issue Date:	Project No:	Scale:
1/13/2023	59815	AS SHOWN

Drawing No.:
C-004

File: \\CHA-LLP.COM\PROJ\PROJECTS\ANY\K6\D59815.000\09_DESIGN\DRAWINGS\01_SHEETS\C-003-TR-DEMO.DWG
Saved: 1/12/2023 9:23:07 AM Plotted: 1/12/2023 10:23:03 AM Current User: Kinney, James Layout:Layout5

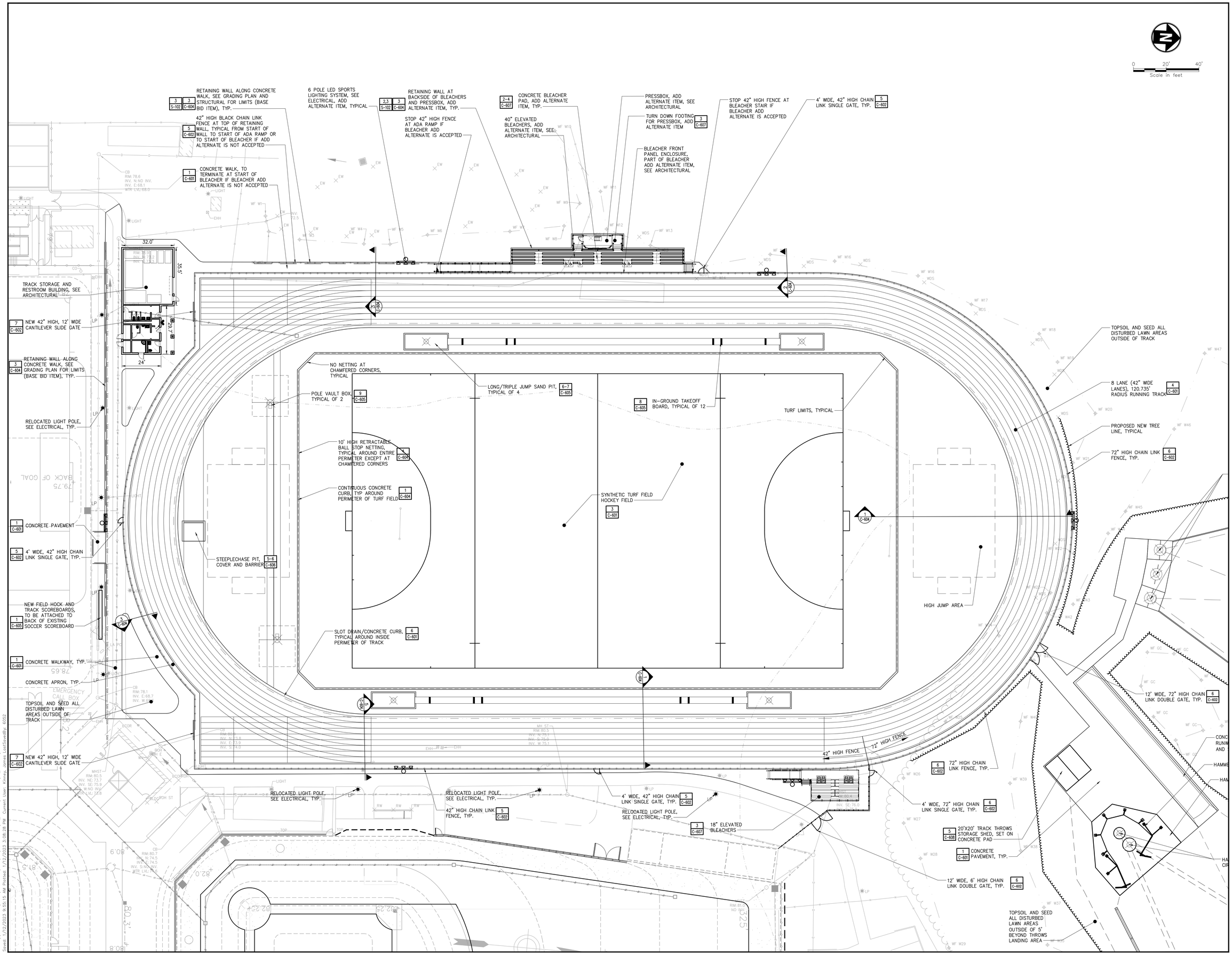

Drawing Copyright © 2020

CHA
350 Corporate Place, Suite 110
Rocky Hill, CT 06067-1861
860.257.8557 . www.chacompanies.com

University of Hartford

IT IS A VIOLATION OF LAW FOR ANY PERSON, UNLESS THEY ARE ACTING UNDER THE DIRECTION OF A LICENSED PROFESSIONAL ENGINEER, ARCHITECT, LANDSCAPE ARCHITECT OR LAND SURVEYOR TO ALTER AN ITEM IN ANY WAY. IF AN ITEM BEARING THE STAMP OF A LICENSED PROFESSIONAL ENGINEER, ARCHITECT, LANDSCAPE ARCHITECT OR LAND SURVEYOR SHALL STAMP THE DOCUMENT AND INCLUDE THE NOTATION "ALTERED BY" FOLLOWED BY THEIR SIGNATURE, THE DATE OF SUCH ALTERATION, AND A SPECIFIC DESCRIPTION OF THE ALTERATION.

UNIVERSITY OF HARTFORD
ATHLETIC SPORTS COMPLEX
200 BLOOMFIELD AVE, WEST
HARTFORD, CT 06117

No.	Submittal / Revision	App'd.	By	Date

TRACK AND FIELD LAYOUT PLAN

Designed By:	Drawn By:	Checked By:
JP	JK	EO
Issue Date:	Project No:	Scale:
1/13/2023	59815	AS SHOWN

Drawing No.:
C-101

File: \\CHA-LLP.COM\PROJ\PROJECTS\ANY\K6\059815.000\09_DESIGN\DRAWINGS\01_SHEETS\C-100-TR-LAYOUT.DWG
Saved: 1/12/2023 9:55:15 AM Plotted: 1/12/2023 3:06:28 PM Garrett Dyer Kenny, James LastSaveBy: 6052

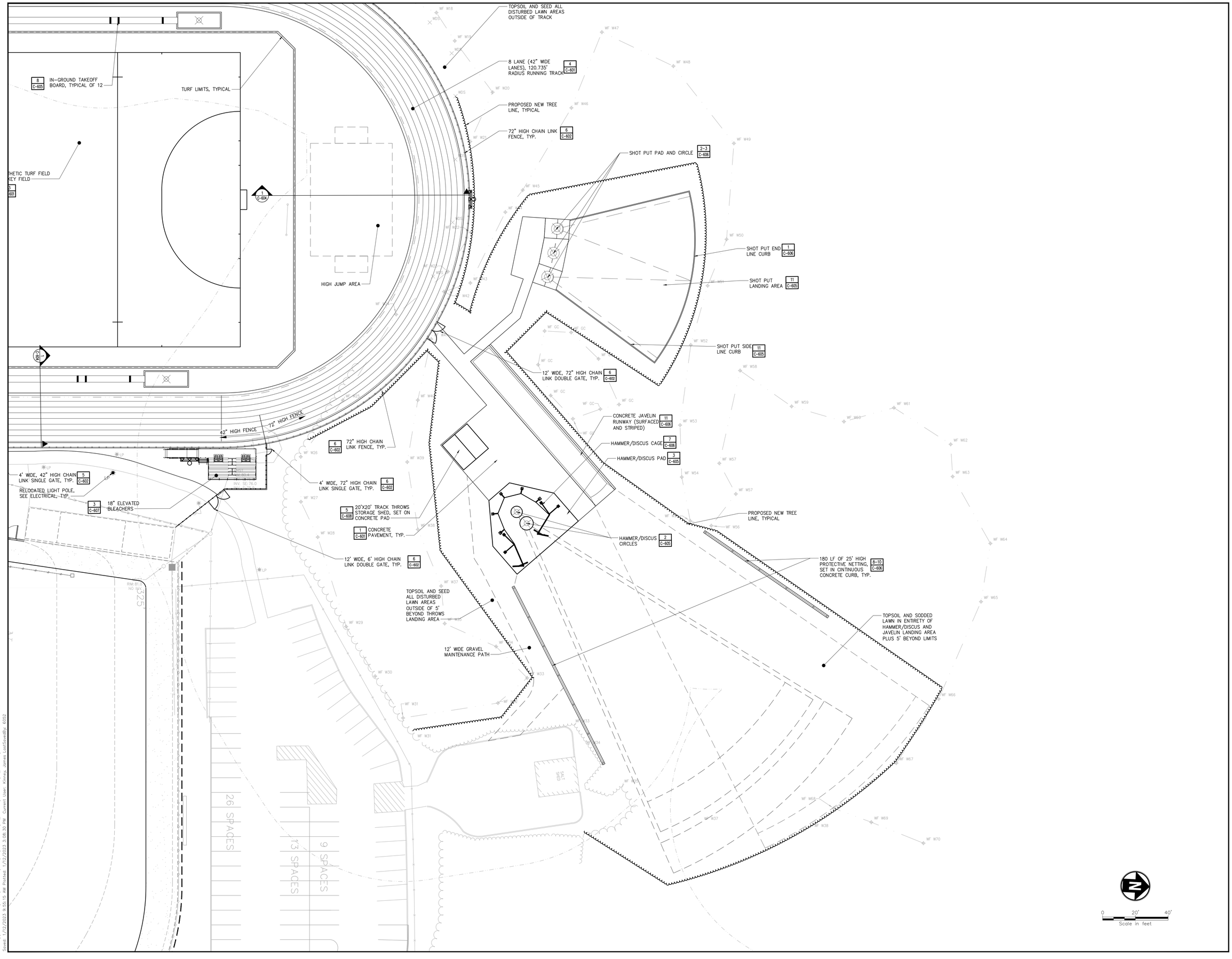

Drawing Copyright © 2020

CHA
300 Corporate Place, Suite 110
Rocky Hill, CT 06067-1861
860.257.8537 . www.chacompanies.com

University of Hartford

IT IS A VIOLATION OF LAW FOR ANY PERSON, UNLESS THEY ARE ACTING UNDER THE DIRECTION OF A LICENSED PROFESSIONAL ENGINEER, ARCHITECT, LANDSCAPE ARCHITECT OR LAND SURVEYOR, TO ALTER AN ITEM IN ANY WAY. IF AN ITEM BEARING THE STAMP OF A LICENSED PROFESSIONAL IS ALTERED, THE ALTERING ENGINEER, ARCHITECT, LANDSCAPE ARCHITECT OF LAND SURVEYOR SHALL AFFIX TO THE ITEM THE PHRASE "ALTERED BY" FOLLOWED BY THEIR SIGNATURE, THE DATE OF SUCH ALTERATION, AND A SPECIFIC DESCRIPTION OF THE ALTERATION.

UNIVERSITY OF HARTFORD
ATHLETIC SPORTS COMPLEX
200 BLOOMFIELD AVE, WEST
HARTFORD, CT 06117

No.	Submittal / Revision	App'd.	By	Date

TRACK AND FIELD LAYOUT PLAN

Designed By:	Drawn By:	Checked By:
JP	JK	EO
Issue Date:	Project No:	Scale:
1/13/2023	59815	AS SHOWN

Drawing No.:
C-102

File: \\CHA-LLP.COM\PROJ\PROJECTS\ANY\KE\059815.000\09_DESIGN\DRAWINGS\01_SHEETS\C-100-TR-LAYOUT.DWG
Saved: 1/12/2023 9:35:15 AM Plotted: 1/12/2023 3:36:30 PM Current User: Kinney, James LastSaved By: 6052

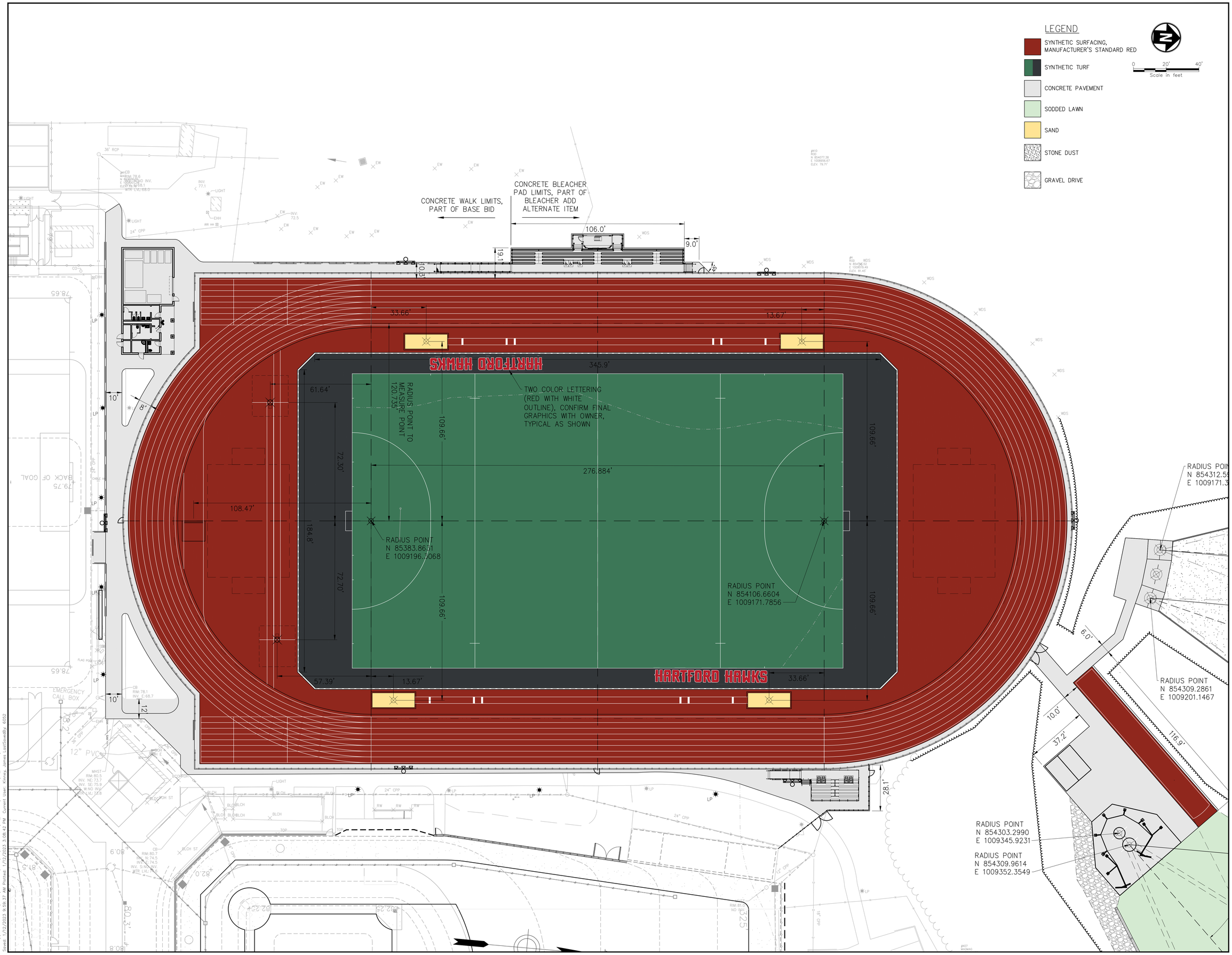

Drawing Copyright © 2020

CHA
300 Corporate Place, Suite 110
Rocky Hill, CT 06067-1861
860.257.8537 . www.chacompanies.com

University of Hartford

IT IS A VIOLATION OF LAW FOR ANY PERSON, UNLESS THEY ARE ACTING UNDER THE DIRECTION OF A LICENSED PROFESSIONAL ENGINEER OR LICENSED LAND SURVEYOR, TO ALTER AN ITEM IN ANY WAY. IF AN ITEM BEARING THE STAMP OF A LICENSED PROFESSIONAL IS ALTERED, THE ALTERING ENGINEER OR LAND SURVEYOR SHALL STAMP THE DOCUMENT AND INCLUDE THE NOTATION "ALTERED BY" FOLLOWED BY THEIR SIGNATURE, THE DATE OF SUCH ALTERATION, AND A SPECIFIC DESCRIPTION OF THE ALTERATION.

UNIVERSITY OF HARTFORD
ATHLETIC SPORTS COMPLEX
200 BLOOMFIELD AVE, WEST
HARTFORD, CT 06117

No.	Submittal / Revision	App'd.	By	Date

TRACK AND FIELD SURFACING AND DIMENSION PLAN

Designed By:	Drawn By:	Checked By:
JP	JK	EO
Issue Date:	Project No:	Scale:
1/13/2023	59815	AS SHOWN

Drawing No.:
C-111

File: \\CHA-LLP.COM\PROJ\PROJECTS\ANY\K6\059815.000\09_DESIGN\DRAWINGS\01_SHEETS\C-103-TR-DIM.DWG
Saved: 1/12/2023 9:08:37 AM Plotted: 1/12/2023 3:08:42 PM Current User: Kinney, James Last Saved By: 6052

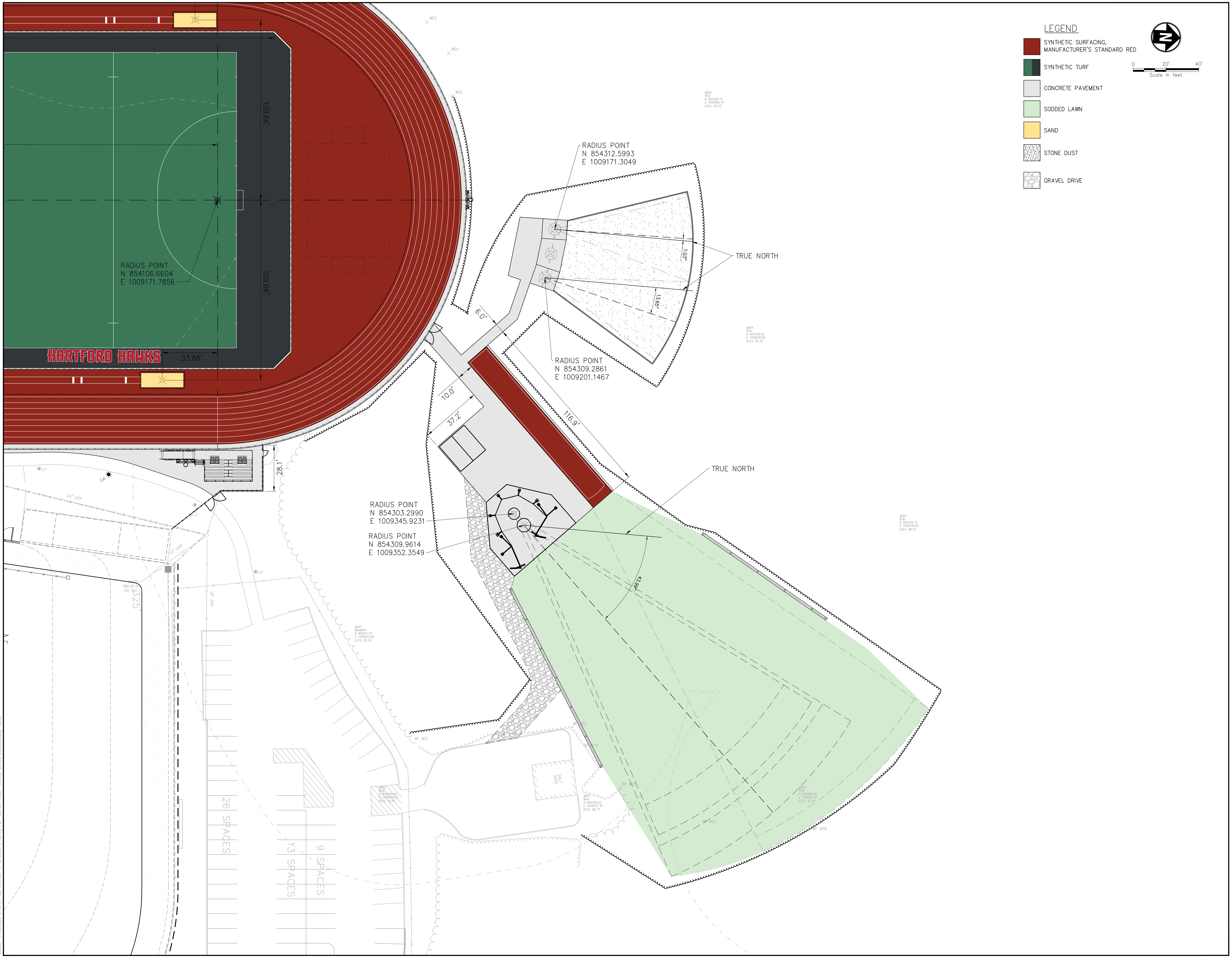

Drawing Copyright © 2020

CHA
200 Corporate Place, Suite 110
Rocky Hill, CT 06067-1861
860.257.4557 . www.chacompanies.com

University of Hartford

IT IS A VIOLATION OF LAW FOR ANY PERSON, UNLESS THEY ARE ACTING UNDER THE DIRECTION OF A LICENSED PROFESSIONAL ENGINEER, ARCHITECT, LANDSCAPE ARCHITECT OR LAND SURVEYOR TO ALTER AN ITEM IN ANY WAY. IF AN ITEM BEARING THE STAMP OF A LICENSED PROFESSIONAL IS ALTERED, THE ALTERING ENGINEER, ARCHITECT, LANDSCAPE ARCHITECT OR LAND SURVEYOR SHALL STAMP THE DOCUMENT AND INCLUDE THE NOTATION "ALTERED BY" FOLLOWED BY THEIR SIGNATURE, THE DATE OF SUCH ALTERATION, AND A SPECIFIC DESCRIPTION OF THE ALTERATION.

UNIVERSITY OF HARTFORD
ATHLETIC SPORTS COMPLEX
200 BLOOMFIELD AVE, WEST HARTFORD, CT 06117

No.	Submittal / Revision	App'd.	By	Date

TRACK AND FIELD SURFACING AND DIMENSION PLAN

Designed By:	Drawn By:	Checked By:
JP	JK	EO
Issue Date:	Project No:	Scale:
1/13/2023	59815	AS SHOWN

Drawing No.:
C-112

Drawing Copyright © 2020

CHA

200 Corporate Place, Suite 110
Rocky Hill, CT 06067-1865
860.257.4557 · www.chacompanies.com

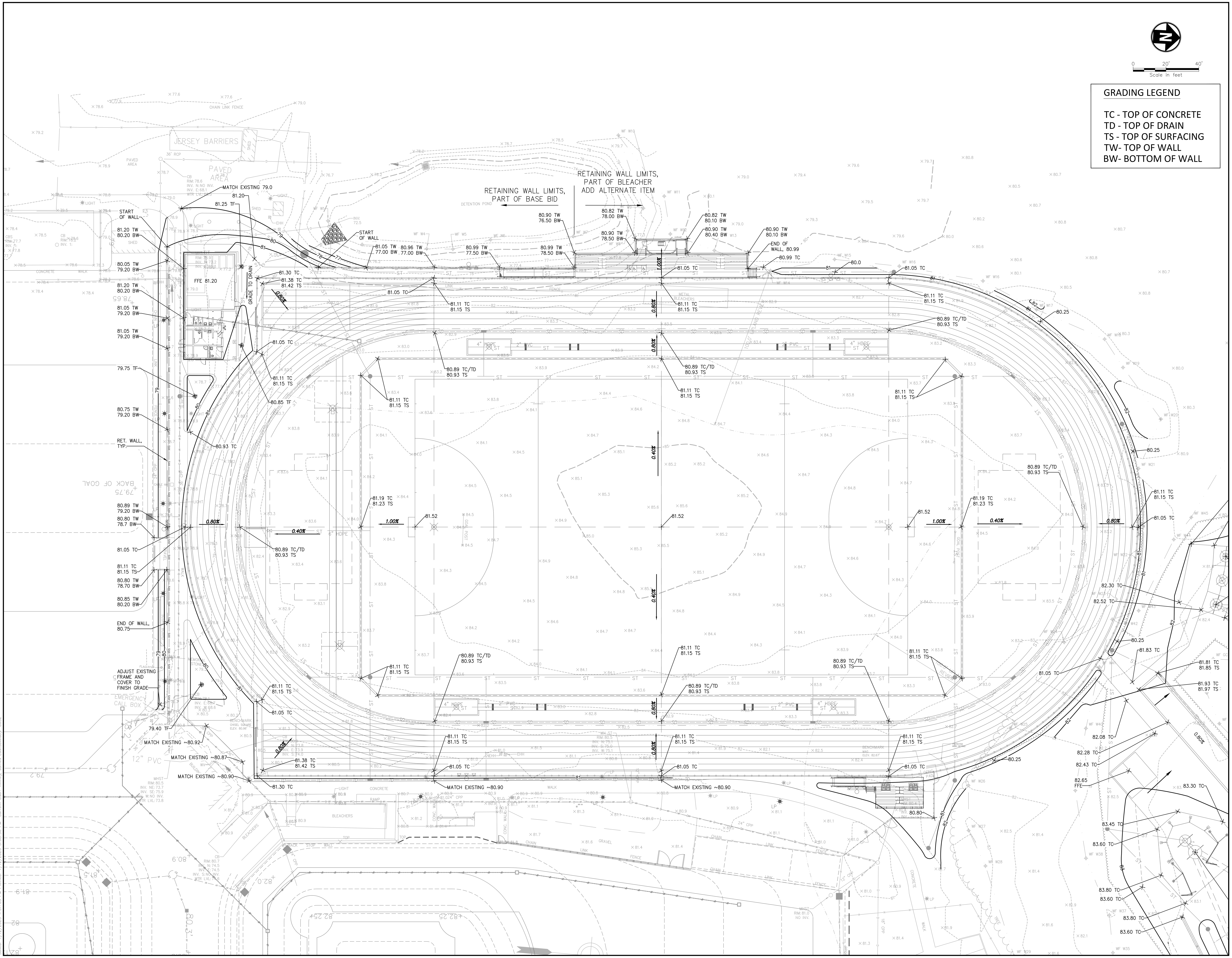

University of Hartford

IT IS A VIOLATION OF LAW FOR ANY PERSON, UNLESS THEY ARE ACTING UNDER THE DIRECTION OF A LICENSED PROFESSIONAL ENGINEER, ARCHITECT, LANDSCAPE ARCHITECT OR LAND SURVEYOR TO ALTER AN ITEM IN ANY WAY. IF AN ITEM BEARING THE STAMP OF A LICENSED PROFESSIONAL IS ALTERED, THE ALTERING ENGINEER, ARCHITECT, LANDSCAPE ARCHITECT OR LAND SURVEYOR SHALL STAMP THE DOCUMENT AND INCLUDE THE NOTATION "ALTERED BY" FOLLOWED BY THEIR SIGNATURE, THE DATE OF SUCH ALTERATION, AND A SPECIFIC DESCRIPTION OF THE ALTERATION.

UNIVERSITY OF HARTFORD
ATHLETIC SPORTS COMPLEX
200 BLOOMFIELD AVE, WEST HARTFORD, CT 06117

No.	Submittal / Revision	App'd.	By	Date

TRACK AND FIELD GRADING PLAN

Designed By:	Drawn By:	Checked By:
JP	JK	EO
Issue Date:	Project No:	Scale:
1/13/2023	59815	AS SHOWN

Drawing No.:

C-201

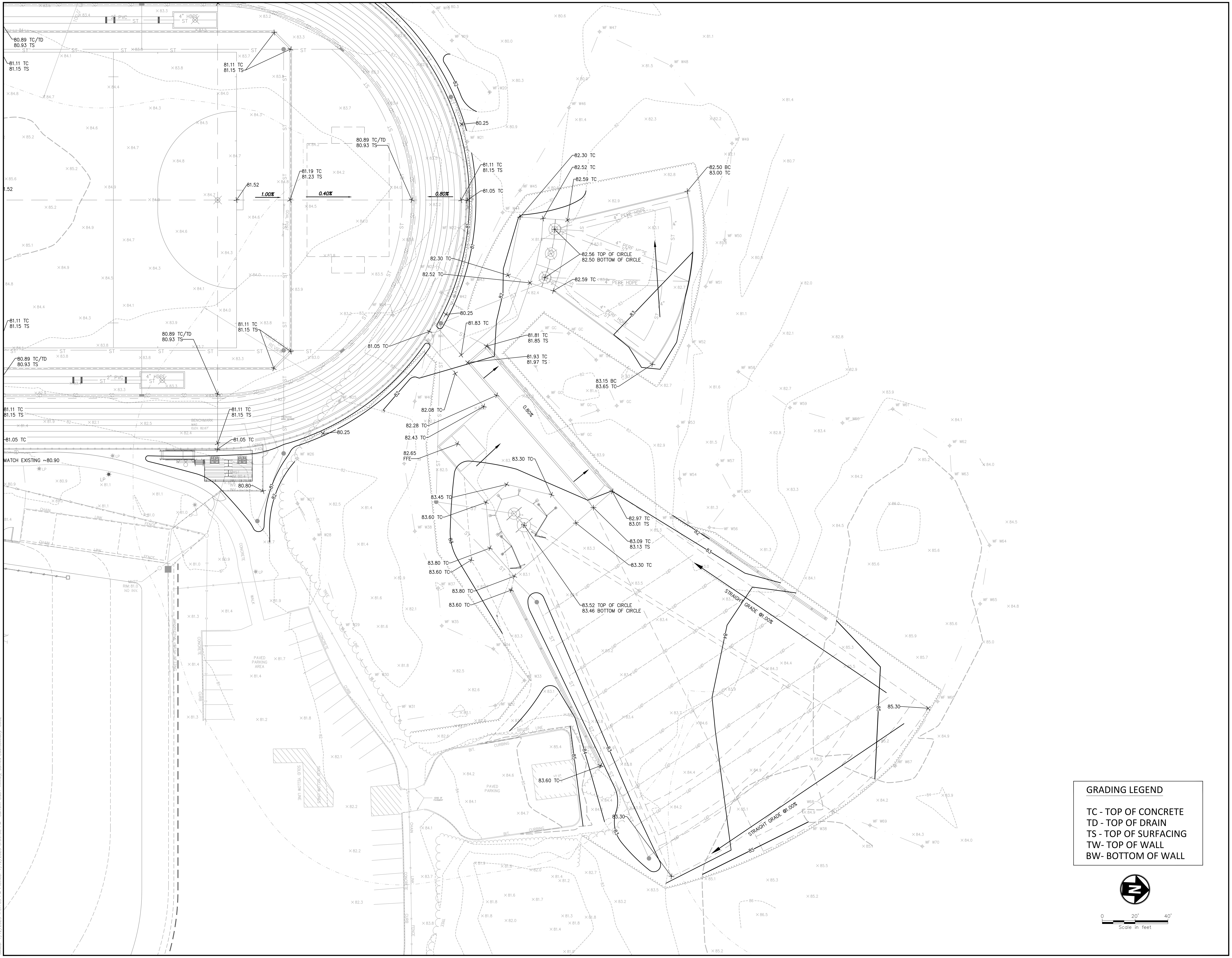

GRADING LEGEND

TC - TOP OF CONCRETE
TD - TOP OF DRAIN
TS - TOP OF SURFACING
TW- TOP OF WALL
BW- BOTTOM OF WALL

Drawing Copyright © 2020

CHA
200 Corporate Place, Suite 110
Rocky Hill, CT 06067-1861
860.257.4557 . www.chacompanies.com

University of Hartford

IT IS A VIOLATION OF LAW FOR ANY PERSON, UNLESS THEY ARE ACTING UNDER THE DIRECTION OF A LICENSED PROFESSIONAL ENGINEER, ARCHITECT, LANDSCAPE ARCHITECT OR LAND SURVEYOR TO ALTER AN ITEM IN ANY WAY. IF AN ITEM BEARING THE STAMP OF A LICENSED PROFESSIONAL IS ALTERED, THE ALTERING ENGINEER, ARCHITECT, LANDSCAPE ARCHITECT OR LAND SURVEYOR SHALL STAMP THE DOCUMENT AND INCLUDE THE NOTATION "ALTERED BY" FOLLOWED BY THEIR SIGNATURE, THE DATE OF SUCH ALTERATION, AND A SPECIFIC DESCRIPTION OF THE ALTERATION.

UNIVERSITY OF HARTFORD
ATHLETIC SPORTS COMPLEX
200 BLOOMFIELD AVE, WEST HARTFORD, CT 06117

No.	Submittal / Revision	App'd.	By	Date

TRACK AND FIELD GRADING PLAN

Designed By:	Drawn By:	Checked By:
JP	JK	EO
Issue Date:	Project No:	Scale:
1/13/2023	59815	AS SHOWN

Drawing No.:

C-202

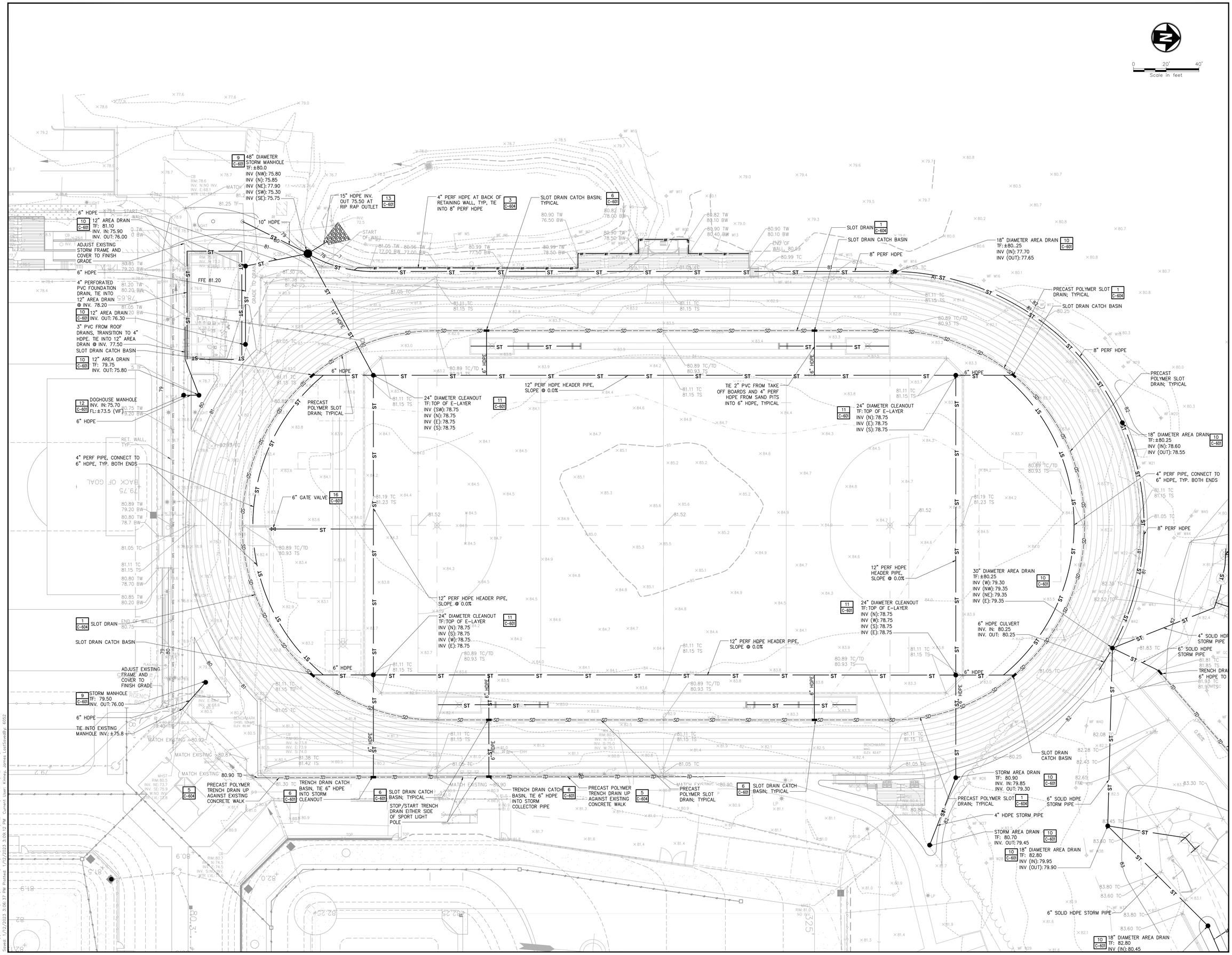

Drawing Copyright © 2020

CHA
390 Corporate Place, Suite 110
Rocky Hill, CT 06067-1861
860.257.8557 . www.chacompanies.com

University of Hartford

IT IS A VIOLATION OF LAW FOR ANY PERSON, UNLESS THEY ARE ACTING UNDER THE DIRECTION OF A LICENSED PROFESSIONAL ENGINEER, ARCHITECT, LANDSCAPE ARCHITECT OR LAND SURVEYOR TO ALTER AN ITEM IN ANY WAY. IF AN ITEM BEARING THE STAMP OF A LICENSED PROFESSIONAL IS ALTERED, THE ALTERING ENGINEER, ARCHITECT, LANDSCAPE ARCHITECT OR LAND SURVEYOR SHALL STAMP THE DOCUMENT AND INCLUDE THE NOTATION "ALTERED BY" FOLLOWED BY THEIR SIGNATURE, THE DATE OF SUCH ALTERATION, AND A SPECIFIC DESCRIPTION OF THE ALTERATION.

UNIVERSITY OF HARTFORD
ATHLETIC SPORTS COMPLEX
200 BLOOMFIELD AVE, WEST
HARTFORD, CT 06117

No.	Submittal / Revision	App'd.	By	Date

TRACK AND FIELD DRAINAGE PLAN

Designed By:	Drawn By:	Checked By:
JP	JK	EO
Issue Date:	Project No:	Scale:
1/13/2023	59815	AS SHOWN

Drawing No.:
C-301

File: \\CHA-LLP.COM\PROJ\PROJECTS\ANY\K6\059815.000\09_DESIGN\DRAWINGS\01_SHEETS\C-300-TR-DRAINAGE.DWG
Saved: 1/12/2023 3:06:37 PM Plotted: 1/12/2023 3:09:12 PM Current User: Kinney, James (JeffSpindler) 8262

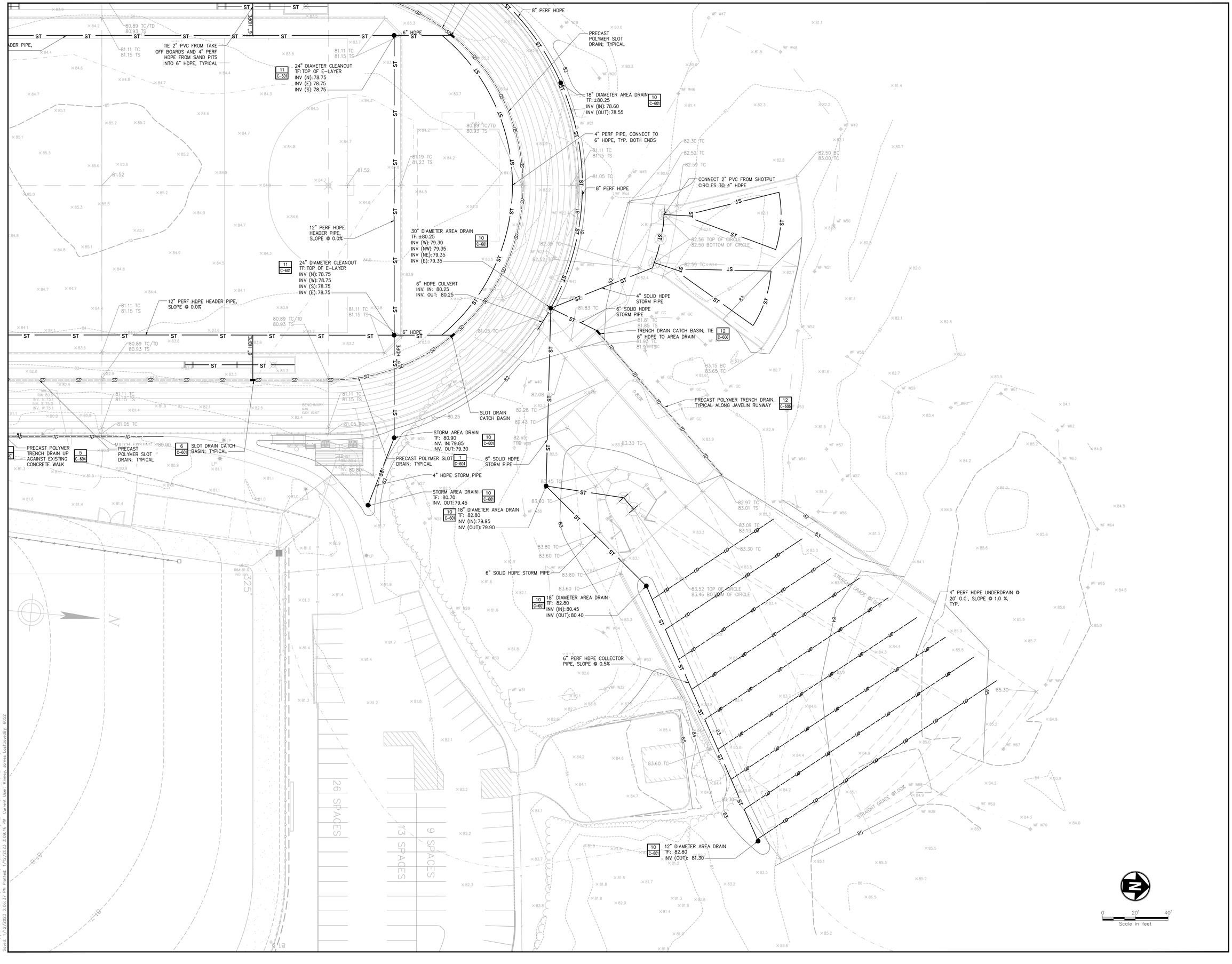

Drawing Copyright © 2020

CHA
350 Corporate Place, Suite 110
Rocky Hill, CT 06067-1861
860.257.4557 www.chacompanies.com

University of Hartford

IT IS A VIOLATION OF LAW FOR ANY PERSON, UNLESS THEY ARE ACTING UNDER THE DIRECTION OF A LICENSED PROFESSIONAL ENGINEER, TO ALTER AN ITEM IN ANY WAY. IF AN ITEM BEARING THE STAMP OF A LICENSED PROFESSIONAL IS ALTERED, THE ALTERING ENGINEER SHALL STAMP THE DOCUMENT AND INCLUDE THE NOTATION "ALTERED BY" FOLLOWED BY THEIR SIGNATURE, THE DATE OF SUCH ALTERATION, AND A SPECIFIC DESCRIPTION OF THE ALTERATION.

UNIVERSITY OF HARTFORD
ATHLETIC SPORTS COMPLEX
200 BLOOMFIELD AVE, WEST
HARTFORD, CT 06117

No.	Submittal / Revision	App'd.	By	Date

TRACK AND FIELD DRAINAGE PLAN

Designed By:	Drawn By:	Checked By:
JP	JK	EO
Issue Date: 1/13/2023	Project No: 59815	Scale: AS SHOWN

Drawing No.:
C-302

File: \\CHA-LLP.COM\PROJ\PROJECTS\ANY\V65\059815.000\09_DESIGN\DRAWINGS\01_SHEETS\C-300-TR-DRAINAGE.DWG
Saved: 1/12/2023 3:06:37 PM Plotted: 1/12/2023 3:08:16 PM Current User: Kinney, James Last Saved By: 6062

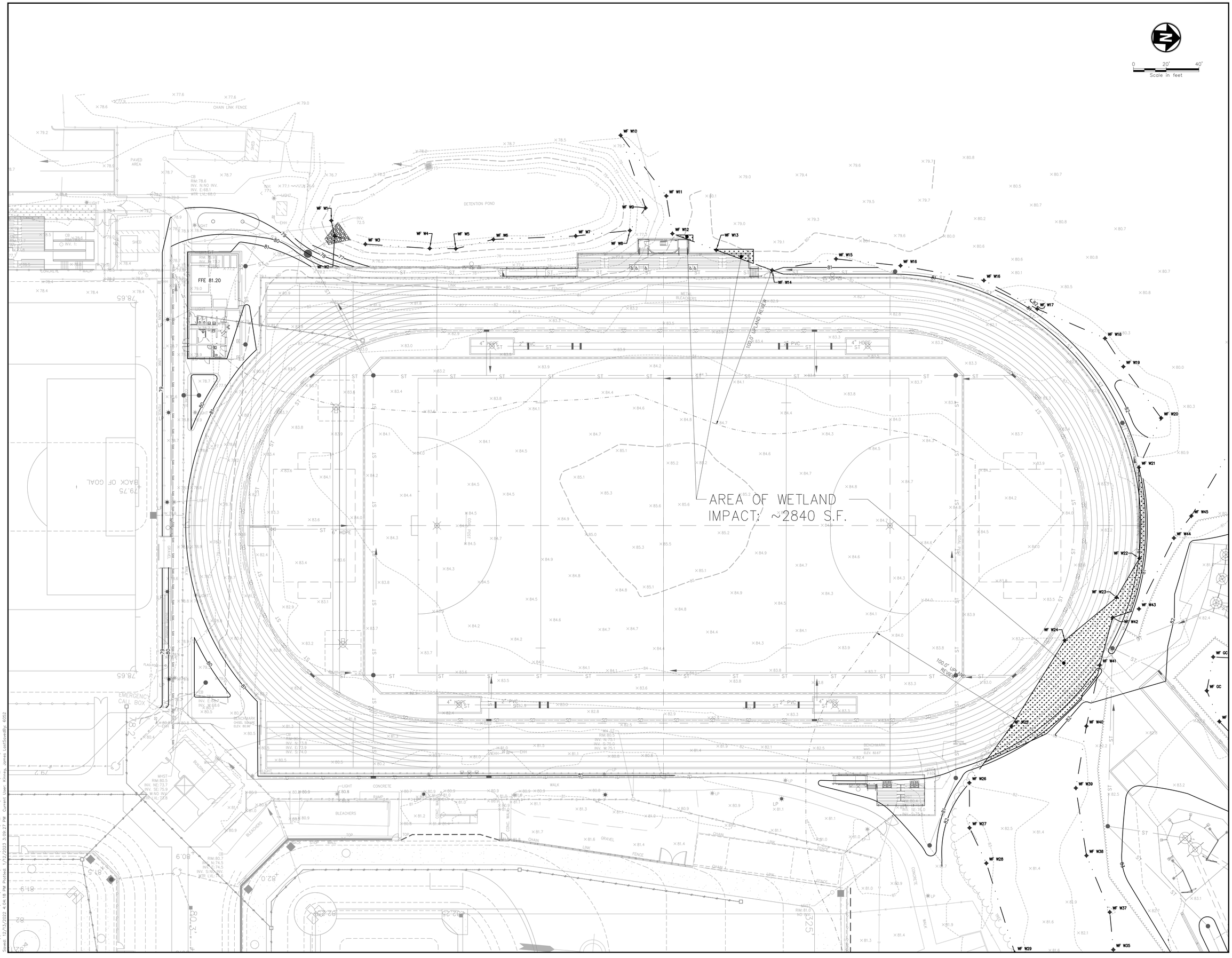

Drawing Copyright © 2020

CHA
300 Corporate Place, Suite 110
Rocky Hill, CT 06067-1861
860.257.4557 . www.chacompanies.com

University of Hartford

IT IS A VIOLATION OF LAW FOR ANY PERSON, UNLESS THEY ARE ACTING UNDER THE DIRECTION OF A LICENSED PROFESSIONAL ENGINEER, ARCHITECT, LANDSCAPE ARCHITECT OR LAND SURVEYOR TO ALTER AN ITEM IN ANY WAY. IF AN ITEM BEARING THE STAMP OF A LICENSED PROFESSIONAL ENGINEER, ARCHITECT, LANDSCAPE ARCHITECT OR LAND SURVEYOR SHALL STAMP THE DOCUMENT AND INCLUDE THE NOTATION "ALTERED BY" FOLLOWED BY THEIR SIGNATURE, THE DATE OF SUCH ALTERATION, AND A SPECIFIC DESCRIPTION OF THE ALTERATION.

UNIVERSITY OF HARTFORD
ATHLETIC SPORTS COMPLEX
200 BLOOMFIELD AVE, WEST
HARTFORD, CT 06117

No.	Submittal / Revision	App'd.	By	Date

TRACK AND FIELD ENVIRONMENTAL PLAN

Designed By:	Drawn By:	Checked By:
JP	JK	EO
Issue Date:	Project No:	Scale:
1/13/2023	59815	AS SHOWN

Drawing No.:
C-401

File: \\CHA-LLP.COM\PROJ\PROJECTS\ANY\K6\059815.000\09_DESIGN\DRAWINGS\01_SHEETS\C-400-TR-ENVR.DWG
Saved: 1/13/2023 4:04:18 PM Plotted: 1/13/2023 3:09:27 PM Current User: Kinney, James LastSavedBy: 6002

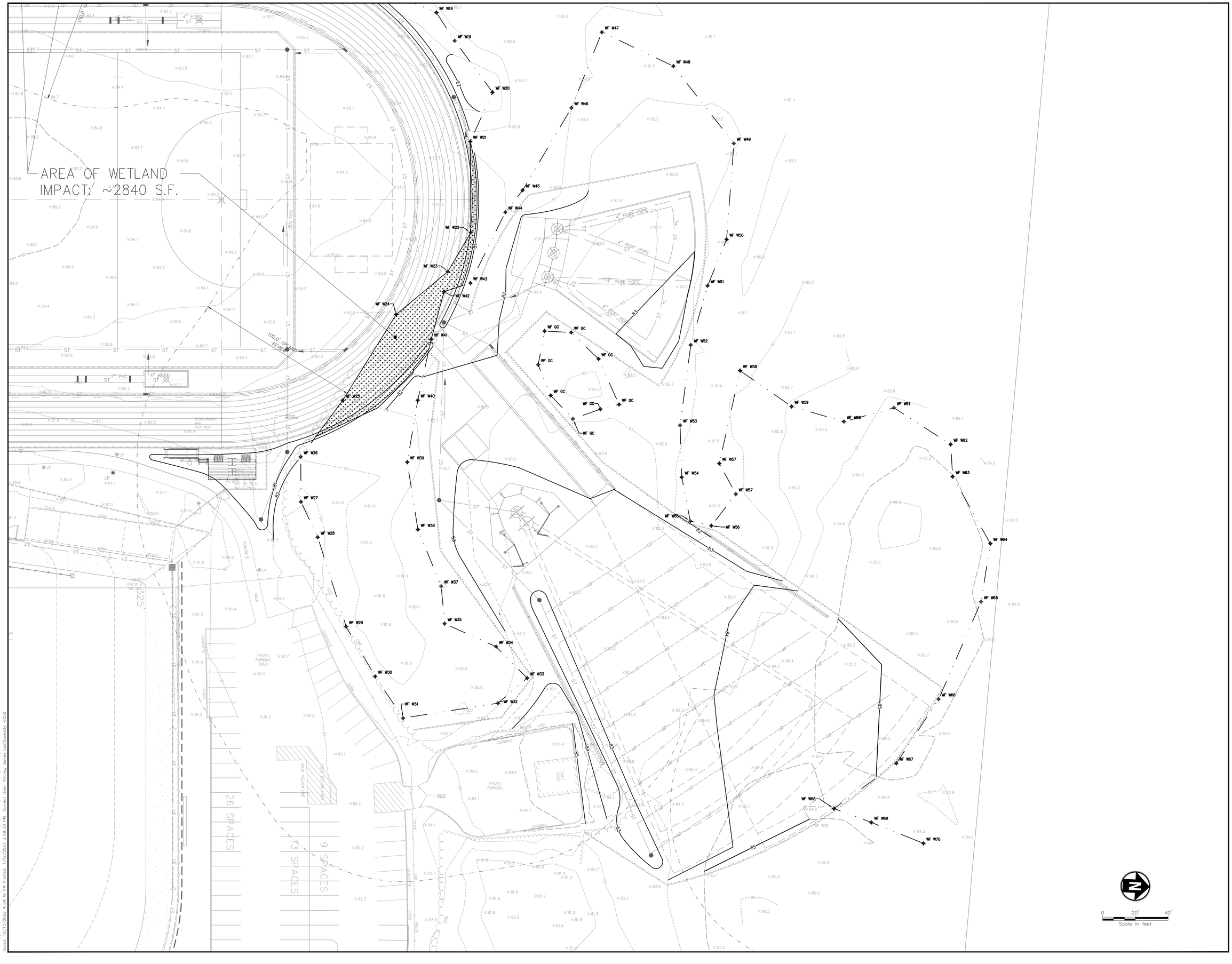

Drawing Copyright © 2020

CHA
350 Corporate Place, Suite 110
Rocky Hill, CT 06067-1861
860.257.8557 www.chacompanies.com

University of Hartford

IT IS A VIOLATION OF LAW FOR ANY PERSON, UNLESS THEY ARE ACTING UNDER THE DIRECTION OF A LICENSED PROFESSIONAL ENGINEER, ARCHITECT, OR LAND SURVEYOR, TO ALTER AN ITEM IN ANY WAY. IF AN ITEM BEARING THE STAMP OF A LICENSED PROFESSIONAL IS ALTERED, THE ALTERING ENGINEER, ARCHITECT, OR LAND SURVEYOR SHALL AFFIX TO THE ITEM THE SEAL AND THE SIGNATURE OF THE ALTERING ENGINEER, ARCHITECT, OR LAND SURVEYOR, THE NOTATION "ALTERED BY" FOLLOWED BY THEIR SIGNATURE, THE DATE OF SUCH ALTERATION, AND A SPECIFIC DESCRIPTION OF THE ALTERATION.

UNIVERSITY OF HARTFORD
ATHLETIC SPORTS COMPLEX
200 BLOOMFIELD AVE, WEST
HARTFORD, CT 06117

No.	Submittal / Revision	App'd.	By	Date

TRACK AND FIELD ENVIRONMENTAL PLAN

Designed By:	Drawn By:	Checked By:
JP	JK	EO
Issue Date:	Project No:	Scale:
1/13/2023	59815	AS SHOWN

Drawing No.:

C-402

File: \\CHA-LLP.COM\PROJ\PROJECTS\ANY\K6\059815.000\09_DESIGN\DRAWINGS\01-SHEETS\C-400-TR-ENVR.DWG
Saved: 12/13/2022 4:04:18 PM Plotted: 1/12/2023 3:09:31 PM Current User: Kinney, James Last Saved By: 6052

<u>DEMOLITION AND EROSION CONTROL NOTES</u>

1. REFER TO DETAIL SHEETS OF THIS PLAN SET FOR: "STORMWATER POLLUTION PREVENTION NOTES".
2. REFER TO GENERAL NOTES SHEET (THIS PLAN SET) FOR "SEQUENCE OF CONSTRUCTION".
3. THE CONTRACTOR SHALL SUBMIT SITE RELATED WORK PHASING/STAGING PLAN TO THE OWNER AND ENGINEER FOR REVIEW AND APPROVAL PRIOR TO COMMENCING WORK.
4. THE CONTRACTOR SHALL VERIFY INVERTS AND LOCATIONS OF EXISTING AND PROPOSED UTILITY TIE-INS AND REPORT BACK TO ENGINEER.
5. ALL MATERIALS REMOVED FROM SITE SHALL BE DISPOSED OF IN ACCORDANCE WITH ALL APPLICABLE LOCAL, STATE AND FEDERAL STANDARDS.
6. CONTRACTOR IS RESPONSIBLE TO IDENTIFY, CONFIRM AND MAINTAIN ALL ACTIVE UTILITIES AND SHALL NOTIFY ENGINEER OF ANY DISCREPANCY.
7. CONTRACTOR IS RESPONSIBLE FOR ALL TEST PITTING REQUIRED DURING CONSTRUCTION TO LOCATE/CONFIRM UTILITY LOCATIONS AND INVERTS FOR CONNECTIONS OR CROSSINGS.
8. THIS PLAN IS INTENDED TO DEPICT GENERAL DEMOLITION AND EROSION CONTROL; REFER TO APPLICABLE PLANS AND SPECIFICATIONS FOR ADDITIONAL INFORMATION AND REQUIREMENTS
9. CONTRACTOR IS RESPONSIBLE FOR DEMOLITION AND REMOVAL OF ALL EXISTING IMPROVEMENTS UNLESS OTHERWISE NOTED.
10. CONTRACTOR TO COORDINATE ABANDONMENT AND/OR REMOVAL OF EXISTING UTILITY SERVICES WITH APPLICABLE PLUMBING CONTRACTOR AND UTILITY PURVEYOR PRIOR TO DEMOLITION.
11. THIS DEMO PLAN IS FOR ILLUSTRATIVE PURPOSES ONLY. CONTRACTOR TO REMOVE, RELOCATE, PROTECT, MAINTAIN AND/OR REPLACE ALL CONFLICTING UTILITIES, STRUCTURES & VEGETATION WITHIN THE LIMIT OF WORK TO BUILD THE IMPROVEMENTS AT NO ADDITIONAL COST TO THE OWNER.
12. BACKFILL OF REMOVED UTILITIES FOUNDATIONS TO BE COMPLETED IN ACCORDANCE WITH THE RECOMMENDATIONS OF THE GEOTECHNICAL ENGINEER AND STRUCTURAL ENGINEER.
13. CONTRACTOR TO COORDINATE UTILITY SERVICE SHUTOFFS WITH OWNER'S REPRESENTATIVE AND APPLICABLE UTILITY PURVEYORS.
14. COORDINATE SECURITY FENCE REQUIREMENTS WITH OWNER PRIOR TO START OF CONSTRUCTION.
15. CONTRACTOR SHALL PROTECT ALL OTHER TREES NOT SCHEDULED FOR REMOVAL.
16. DISPOSAL OF ALL EXCESS MATERIALS, SUITABLE AND UNSUITABLE, AND DEBRIS FROM SITEWORK OPERATIONS IS THE CONTRACTOR'S RESPONSIBILITY AT NO ADDITIONAL COST TO THE OWNER. REFER TO GEOTECHNICAL REPORT PREPARED FOR THE PROJECT WHICH INCLUDES BORING MAP AND LOGS.
17. CONTRACTOR TO LOWER EXISTING STRUCTURES AND UTILITY VALVES (REMOVE COVER AND TOP SECTION AS NEEDED) TO PREVENT DAMAGE DURING PAVEMENT RECLAMATION (IF ALTERNATE IS ACCEPTED).
18. THE CONTRACTOR SHALL BE RESPONSIBLE FOR THE LOCKED SECURITY OF THE PROJECT SITE TO THE LIMIT OF WORK. THE PROJECT SITE WOULD BE CONSIDERED THE LIMIT OF WORK IDENTIFIED ON "C-500 EROSION CONTROL PLAN" AND ANY MATERIAL EQUIPMENT/LAYDOWN, OR AREA REQUIRED TO COMPLETE THE CONSTRUCTION OPERATIONS. ALL COSTS ASSOCIATED WITH THE SECURITY OF THE SITE THAT MEETS THE REQUIREMENTS OF THE CONTRACTORS LOGISTIC PLAN AND TO THE SATISFACTION OF THE OWNER AND ENGINEER SHALL BE INCLUDED IN THE BASE BID COST. THE SECURITY ENCLOSURE SHALL BE A MINIMUM OF 6 FOOT HIGH GALVANIZED CHAIN-LINK FENCE, APPROPRIATE LOCKABLE GATES AND VISUAL SCREENING APPLIED TO THE FENCE. THE FENCE ANCHORING SHALL BE SUFFICIENT TO ENSURE THE FENCE WILL NOT BE BREACHED DUE TO WEATHER CONDITIONS (I.E. WIND).
19. REFER TO SUPPLEMENTAL INFORMATION UNDER SECTIONS 013529, 312310, AND 312319 FOR PROCEDURES ON HOW TO HANDLE ALL EXCAVATED MATERIAL ON SITE.

LEGEND

LIMIT OF DISTURBANCE
SILT FENCE
INLET PROTECTION
STABILIZED CONSTRUCTION ENTRANCE
TEMPORARY CONSTRUCTION FENCE

0 20' 40'
Scale in feet

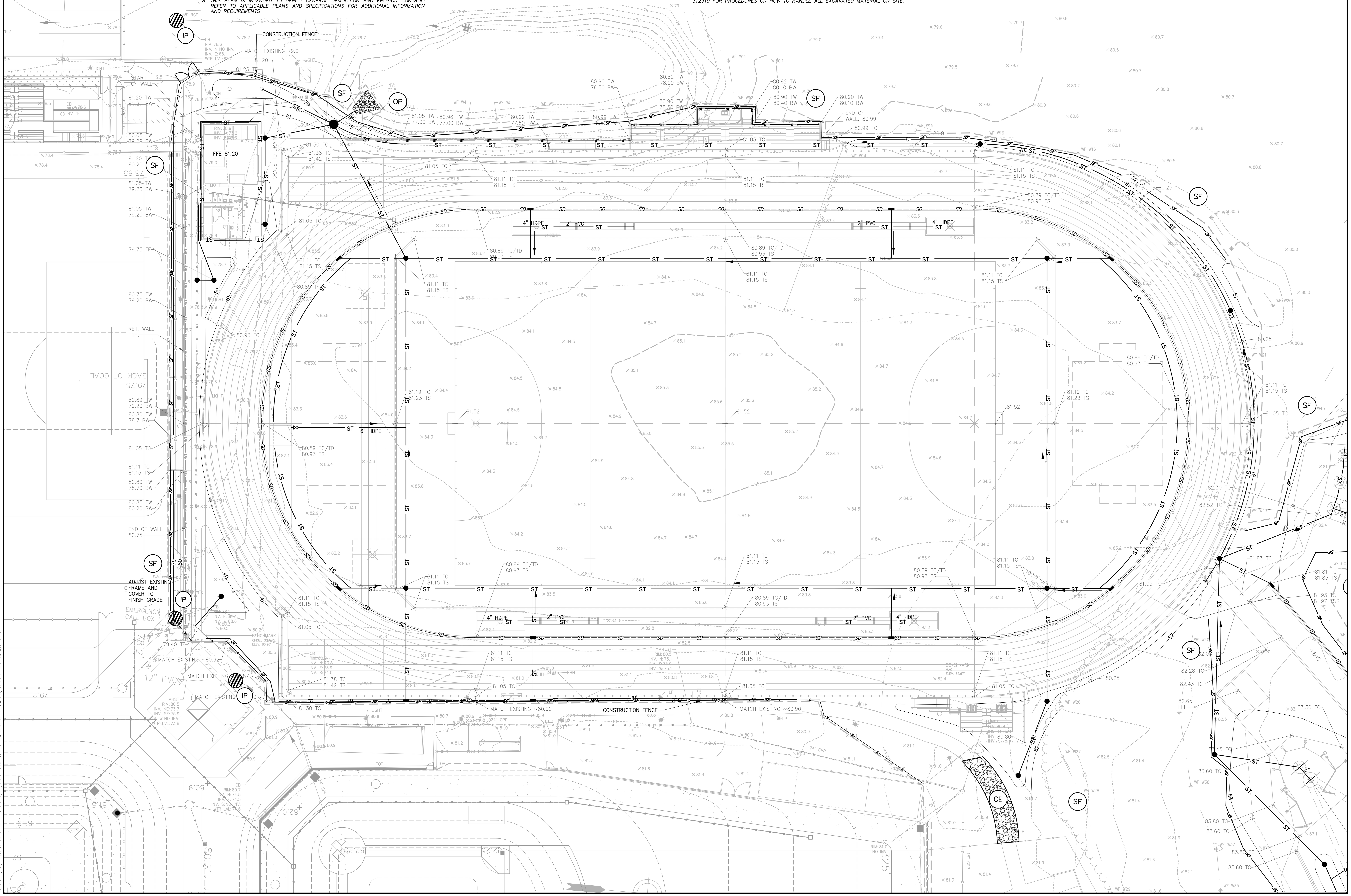

Drawing Copyright © 2020

CHA

IT IS A VIOLATION OF LAW FOR ANY PERSON, UNLESS THEY ARE ACTING UNDER THE DIRECTION OF A LICENSED PROFESSIONAL ENGINEER, ARCHITECT, LANDSCAPE ARCHITECT OR LAND SURVEYOR TO ALTER AN ITEM IN ANY WAY. IF AN ITEM BEARING THE STAMP OF A LICENSED PROFESSIONAL IS ALTERED, THE ALTERING ENGINEER, ARCHITECT, LANDSCAPE ARCHITECT OR LAND SURVEYOR SHALL STAMP THE DOCUMENT AND INCLUDE THE NOTATION "ALTERED BY" FOLLOWED BY THEIR SIGNATURE, THE DATE OF SUCH ALTERATION, AND A SPECIFIC DESCRIPTION OF THE ALTERATION.

UNIVERSITY OF HARTFORD
ATHLETIC SPORTS COMPLEX
200 BLOOMFIELD AVE, WEST
HARTFORD, CT 06117

No.	Submittal / Revision	App'd.	By	Date

TRACK EROSION AND SEDIMENT CONTROL PLAN

Designed By:	Drawn By:	Checked By:
JP	JK	EO
Issue Date:	Project No:	Scale:
1/13/2023	59815	AS SHOWN

Drawing No.:

C-411

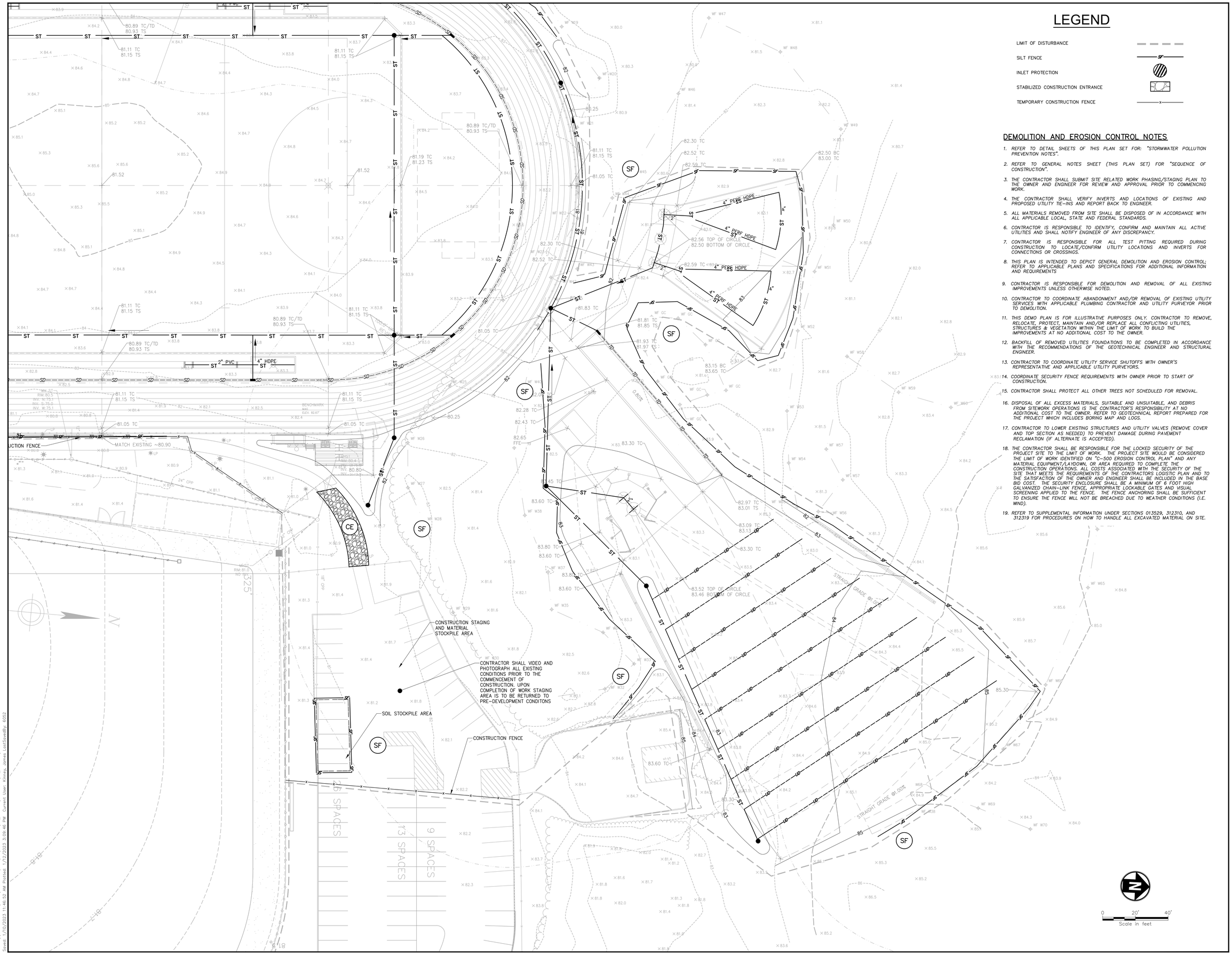

LEGEND

LIMIT OF DISTURBANCE	
SILT FENCE	SF
INLET PROTECTION	
STABILIZED CONSTRUCTION ENTRANCE	
TEMPORARY CONSTRUCTION FENCE	x

DEMOLITION AND EROSION CONTROL NOTES

1. REFER TO DETAIL SHEETS OF THIS PLAN SET FOR: "STORMWATER POLLUTION PREVENTION NOTES".
2. REFER TO GENERAL NOTES SHEET (THIS PLAN SET) FOR "SEQUENCE OF CONSTRUCTION".
3. THE CONTRACTOR SHALL SUBMIT SITE RELATED WORK PHASING/STAGING PLAN TO THE OWNER AND ENGINEER FOR REVIEW AND APPROVAL PRIOR TO COMMENCING WORK.
4. THE CONTRACTOR SHALL VERIFY INVERTS AND LOCATIONS OF EXISTING AND PROPOSED UTILITY TIE-INS AND REPORT BACK TO ENGINEER.
5. ALL MATERIALS REMOVED FROM SITE SHALL BE DISPOSED OF IN ACCORDANCE WITH ALL APPLICABLE LOCAL, STATE AND FEDERAL STANDARDS.
6. CONTRACTOR IS RESPONSIBLE TO IDENTIFY, CONFIRM AND MAINTAIN ALL ACTIVE UTILITIES AND SHALL NOTIFY ENGINEER OF ANY DISCREPANCY.
7. CONTRACTOR IS RESPONSIBLE FOR ALL TEST PITTING REQUIRED DURING CONSTRUCTION TO LOCATE/CONFIRM UTILITY LOCATIONS AND INVERTS FOR CONNECTIONS OR CROSSINGS.
8. THIS PLAN IS INTENDED TO DEPICT GENERAL DEMOLITION AND EROSION CONTROL; REFER TO APPLICABLE PLANS AND SPECIFICATIONS FOR ADDITIONAL INFORMATION AND REQUIREMENTS
9. CONTRACTOR IS RESPONSIBLE FOR DEMOLITION AND REMOVAL OF ALL EXISTING IMPROVEMENTS UNLESS OTHERWISE NOTED.
10. CONTRACTOR TO COORDINATE ABANDONMENT AND/OR REMOVAL OF EXISTING UTILITY SERVICES WITH APPLICABLE PLUMBING CONTRACTOR AND UTILITY PURVEYOR PRIOR TO DEMOLITION.
11. THIS DEMO PLAN IS FOR ILLUSTRATIVE PURPOSES ONLY. CONTRACTOR TO REMOVE, RELOCATE, PROTECT, MAINTAIN AND/OR REPLACE ALL CONFLICTING UTILITIES, STRUCTURES & VEGETATION WITHIN THE LIMIT OF WORK TO BUILD THE IMPROVEMENTS AT NO ADDITIONAL COST TO THE OWNER.
12. BACKFILL OF REMOVED UTILITIES FOUNDATIONS TO BE COMPLETED IN ACCORDANCE WITH THE RECOMMENDATIONS OF THE GEOTECHNICAL ENGINEER AND STRUCTURAL ENGINEER.
13. CONTRACTOR TO COORDINATE UTILITY SERVICE SHUTOFFS WITH OWNER'S REPRESENTATIVE AND APPLICABLE UTILITY PURVEYORS.
14. COORDINATE SECURITY FENCE REQUIREMENTS WITH OWNER PRIOR TO START OF CONSTRUCTION.
15. CONTRACTOR SHALL PROTECT ALL OTHER TREES NOT SCHEDULED FOR REMOVAL.
16. DISPOSAL OF ALL EXCESS MATERIALS, SUITABLE AND UNSUITABLE, AND DEBRIS FROM SITEWORK OPERATIONS IS THE CONTRACTOR'S RESPONSIBILITY AT NO ADDITIONAL COST TO THE OWNER. REFER TO GEOTECHNICAL REPORT PREPARED FOR THE PROJECT WHICH INCLUDES BORING MAP AND LOGS.
17. CONTRACTOR TO LOWER EXISTING STRUCTURES AND UTILITY VALVES (REMOVE COVER AND TOP SECTION AS NEEDED) TO PREVENT DAMAGE DURING PAVEMENT RECLAMATION (IF ALTERNATE IS ACCEPTED).
18. THE CONTRACTOR SHALL BE RESPONSIBLE FOR THE LOCKED SECURITY OF THE PROJECT SITE TO THE LIMIT OF WORK. THE PROJECT SITE WOULD BE CONSIDERED THE LIMIT OF WORK IDENTIFIED ON "C-500 EROSION CONTROL PLAN" AND ANY MATERIAL EQUIPMENT/LAYDOWN, OR AREA REQUIRED TO COMPLETE THE CONSTRUCTION OPERATIONS. ALL COSTS ASSOCIATED WITH THE SECURITY OF THE SITE THAT MEETS THE REQUIREMENTS OF THE CONTRACTORS LOGISTIC PLAN AND TO THE SATISFACTION OF THE OWNER AND ENGINEER SHALL BE INCLUDED IN THE BASE BID COST. THE SECURITY ENCLOSURE SHALL BE A MINIMUM OF 6 FOOT HIGH GALVANIZED CHAIN-LINK FENCE, APPROPRIATE LOCKABLE GATES AND VISUAL SCREENING APPLIED TO THE FENCE. THE FENCE ANCHORING SHALL BE SUFFICIENT TO ENSURE THE FENCE WILL NOT BE BREACHED DUE TO WEATHER CONDITIONS (I.E. WIND).
19. REFER TO SUPPLEMENTAL INFORMATION UNDER SECTIONS 013529, 312310, AND 312319 FOR PROCEDURES ON HOW TO HANDLE ALL EXCAVATED MATERIAL ON SITE.

0 20' 40'
Scale in feet

Drawing Copyright © 2020

CHA
300 Corporate Place, Suite 110
Rocky Hill, CT 06067-1861
860.257.8557 www.chacompanies.com

University of Hartford

IT IS A VIOLATION OF LAW FOR ANY PERSON, UNLESS THEY ARE ACTING UNDER THE DIRECTION OF A LICENSED PROFESSIONAL ENGINEER, ARCHITECT, LANDSCAPE ARCHITECT OR LAND SURVEYOR TO ALTER AN ITEM IN ANY WAY. IF AN ITEM BEARING THE STAMP OF A LICENSED PROFESSIONAL IS ALTERED, THE ALTERING ENGINEER, ARCHITECT, LANDSCAPE ARCHITECT OR LAND SURVEYOR SHALL STAMP THE DOCUMENT AND INCLUDE THE NOTATION "ALTERED BY" FOLLOWED BY their signature, THE DATE OF SUCH ALTERATION, AND A SPECIFIC DESCRIPTION OF THE ALTERATION.

UNIVERSITY OF HARTFORD
ATHLETIC SPORTS COMPLEX
200 BLOOMFIELD AVE, WEST
HARTFORD, CT 06117

No.	Submittal / Revision	App'd.	By	Date

TRACK EROSION AND SEDIMENT CONTROL PLAN

Designed By:	Drawn By:	Checked By:
JP	JK	EO
Issue Date:	Project No:	Scale:
1/13/2023	59815	AS SHOWN

Drawing No.:
C-412

File: \\CHA-LLP.COM\PROJ\PROJECTS\ANY\K6\059815.000\09_DESIGN\DRAWINGS\01_SHEETS\C-410_TR-E&S.DWG
Saved: 1/10/2023 11:46:52 AM Plotted: 1/12/2023 3:09:46 PM Current User: Kinney, James Last Saved By: 8052

Drawing Copyright © 2020

CHA
300 Corporate Place, Suite 110
Rocky Hill, CT 06067-1861
860.257.8557 . www.chacompanies.com

University of Hartford

0 20' 40'
Scale in feet

20,000 GALLON CISTERN 9 C-603

PUMP STATION, 420 GPM @ 110 PSI 11 C-603

PROVIDE LANDSCAPING AROUND PUMP STATION

6" HDPE PIPE TO STORAGE TANK

POWER/COMMUNICATION BOXES (SIDE BY SIDE) IN CONCRETE, SEE ELECTRICAL FOR CONDUIT AND POWER REQUIREMENTS, TYPICAL WHERE SHOWN 15 C-601

POWER/COMMUNICATION BOXES (SIDE BY SIDE) IN TRACK SURFACE, SEE ELECTRICAL FOR CONDUIT AND POWER REQUIREMENTS, TYPICAL WHERE SHOWN 14 C-601

4" SDR35 PVC SANITARY SEWER SERVICE

SANITARY SEWER DOGHOUSE MANHOLE. INV.(4"): 77.00 12 C-601

SEE PLUMBING FOR CONTINUATION FOR SANITARY AND WATER LINES INV. : 77.20

2" HDPE WATER SERVICE LINE

6" IRRIGATION MAIN LINE TO POP UP SPRINKLER HEADS, TYPICAL

1 1/2" QUICK CONNECT VALVE AND BOX IN TRACK SURFACE, TYP. 2 C-602

POP UP SPRINKLER HEAD, TYP OF 10 10 C-603

IRRIGATION VALVE BOX, TYP OF 10 12 C-603

POWER BOX ONLY IN SYNTHETIC TURF, SEE ELECTRICAL FOR CONDUIT AND POWER REQUIREMENTS, TYPICAL WHERE SHOWN 14 C-601

PROVIDE 10' SEPARATION BETWEEN NEW POTABLE WATER MAIN AND EXISTING SANITARY PIPE, TYPICAL

POWER BOX ONLY IN TRACK SURFACE 14 C-601

1 1/2" QUICK CONNECT VALVE AND BOX IN TRACK SURFACE, TYP. 2 C-602

2" IRRIGATION PIPE TO QUICK CONNECTS, TYP.

3" IRRIGATION LINE TO STORAGE TANK

ADJUST EXISTING FRAME AND

TIE 2" HDPE WATER LINE INTO EXISTING WATER MAIN AND PROVIDE 2" GATE VALVE. CONTRACTOR TO FIELD LOCATE WATER MAIN NEAR EXISTING BUILDING 16 C-601

CONNECT NEW 3" IRRIGATION LINE TO EXISTING 3" BACKFLOW PROTECTED IRRIGATION LINE AND PROVIDE NEW 3" SHUTOFF VALVE 17 C-601

1 1/2" QUICK CONNECT VALVE AND BOX IN TRACK SURFACE, TYP. 2 C-602

POWER BOX ONLY IN SYNTHETIC TURF 14 C-601

POP UP SPRINKLER HEAD, TYP OF 10 12 C-603

IRRIGATION VALVE BOX, TYP OF 10 10 C-603

POWER/COMMUNICATION BOXES (SIDE BY SIDE) IN TRACK SURFACE 14 C-601

POWER/COMMUNICATION BOXES (SIDE BY SIDE) IN CONCRETE 15 C-601

POWER BOX ONLY IN TRACK SURFACE 14 C-601

2" IRRIGATION PIPE TO QUICK CONNECTS, TYP.

15 C-601 POWER BOX ONLY IN LAWN

15 C-601 POWER BOX ONLY IN LAWN

IT IS A VIOLATION OF LAW FOR ANY PERSON, UNLESS THEY ARE ACTING UNDER THE DIRECTION OF A LICENSED PROFESSIONAL ENGINEER, ARCHITECT, LANDSCAPE ARCHITECT OR LAND SURVEYOR, TO ALTER AN ITEM IN ANY WAY. IF AN ITEM BEARING THE STAMP OF A LICENSED PROFESSIONAL ENGINEER, ARCHITECT, LANDSCAPE ARCHITECT OR LAND SURVEYOR SHALL STAMP THE DOCUMENT AND INCLUDE THE NOTATION "ALTERED BY" FOLLOWED BY THEIR SIGNATURE, THE DATE OF SUCH ALTERATION, AND A SPECIFIC DESCRIPTION OF THE ALTERATION.

UNIVERSITY OF HARTFORD
ATHLETIC SPORTS COMPLEX
200 BLOOMFIELD AVE, WEST
HARTFORD, CT 06117

No.	Submittal / Revision	App'd.	By	Date

TRACK AND FIELD UTILITY PLAN

Designed By:	Drawn By:	Checked By:
JP	JK	EO
Issue Date:	Project No:	Scale:
1/13/2023	59815	AS SHOWN

Drawing No.:
C-501

File: \\CHA-LLP.COM\PROJ\PROJECTS\ANY\K6\05815.000\09_DESIGN\DRAWINGS\01_SHEETS\C-500-TR-UTIL.DWG
Saved: 1/11/2023 8:36:05 AM Plotted: 1/12/2023 3:09:56 PM Current layer: Kimmy, James (ad15jamesk)

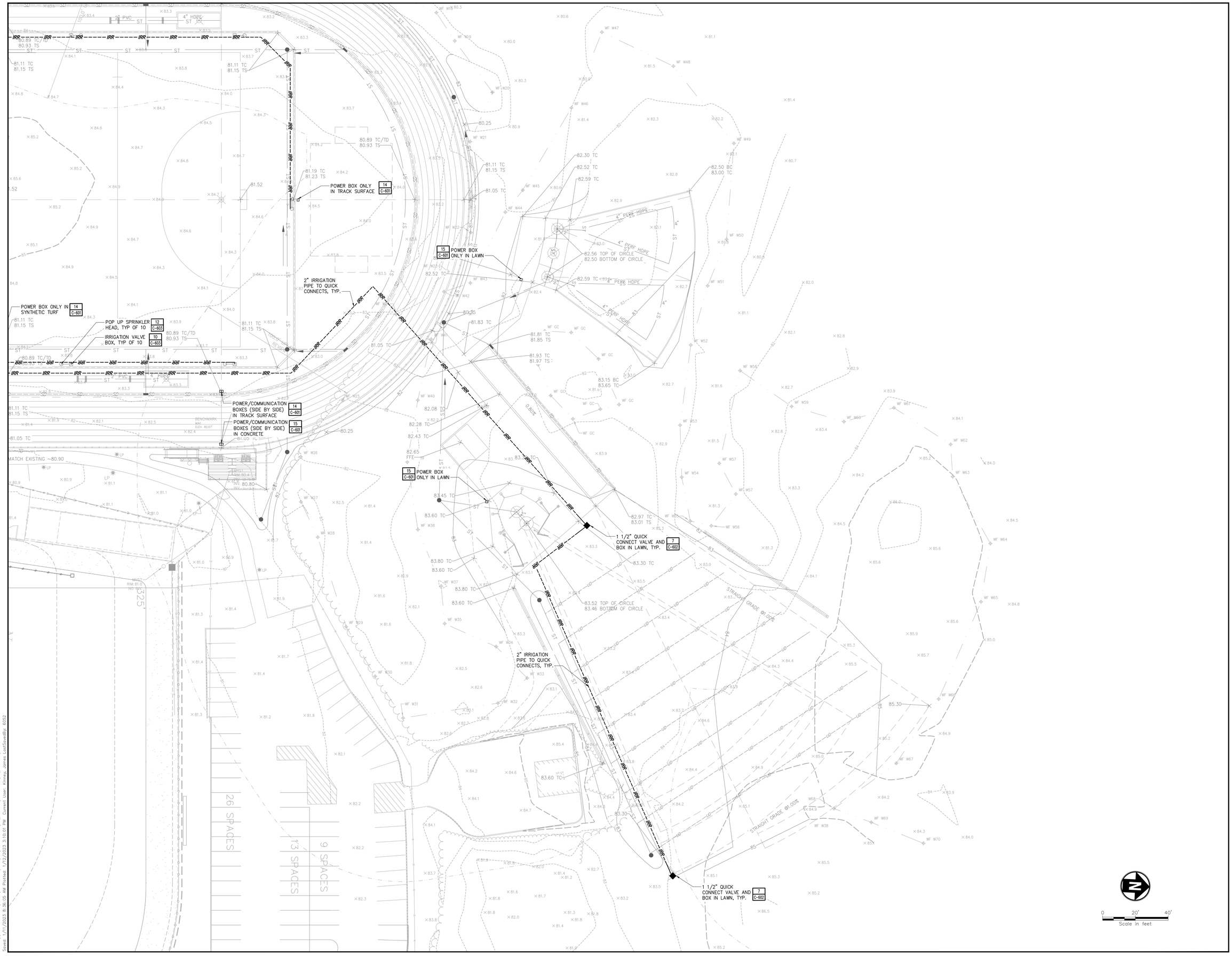

Drawing Copyright © 2020

CHA
300 Corporate Place, Suite 110
Rocky Hill, CT 06067-1861
860.257.8557 . www.chacompanies.com

University of Hartford

IT IS A VIOLATION OF LAW FOR ANY PERSON, UNLESS THEY ARE ACTING UNDER THE DIRECTION OF A LICENSED PROFESSIONAL ENGINEER, ARCHITECT, LANDSCAPE ARCHITECT OR LAND SURVEYOR TO ALTER AN ITEM IN ANY WAY. IF AN ITEM BEARING THE STAMP OF A LICENSED PROFESSIONAL ENGINEER, ARCHITECT, LANDSCAPE ARCHITECT OR LAND SURVEYOR SHALL STAMP THE DOCUMENT AND INCLUDE THE NOTATION "ALTERED BY" FOLLOWED BY THEIR SIGNATURE AND THE DATE OF SUCH ALTERATION, AND A SPECIFIC DESCRIPTION OF THE ALTERATION.

UNIVERSITY OF HARTFORD
ATHLETIC SPORTS COMPLEX
200 BLOOMFIELD AVE, WEST
HARTFORD, CT 06117

No.	Submittal / Revision	App'd.	By	Date

TRACK AND FIELD UTILITY PLAN

Designed By:	Drawn By:	Checked By:
JP	JK	EO
Issue Date:	Project No:	Scale:
1/13/2023	59815	AS SHOWN

Drawing No.:
C-502

File: \\CHA-LLP.COM\PROJ\PROJECTS\ANY\K6\U59815.000\09_DESIGN\DRAWINGS\01_SHEETS\C-500-TR-UTIL.DWG
Saved: 1/11/2023 8:36:05 AM Plotted: 1/11/2023 3:10:01 PM Current User: Kenny, James LastSaveBy: 6052

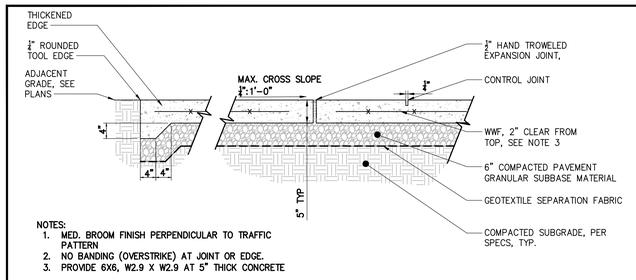

NOTES:
1. MED. BROOM FINISH PERPENDICULAR TO TRAFFIC PATTERN
2. NO BANDING (OVERSTRIKE) AT JOINT OR EDGE.
3. PROVIDE 6X6, W2.9 X W2.9 AT 5" THICK CONCRETE

1 CONCRETE PAVEMENT
SCALE: N.T.S.

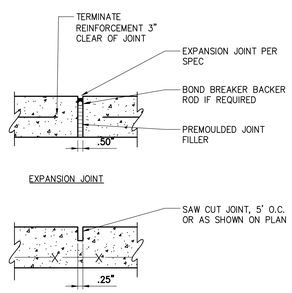

EXPANSION JOINTS TO OCCUR 25' O.C. MAX & AT ALL CURBS, WALLS, & VERT. ELEMENTS, AND AS SHOWN ON PLANS

2 CONCRETE JOINTS
SCALE: N.T.S.

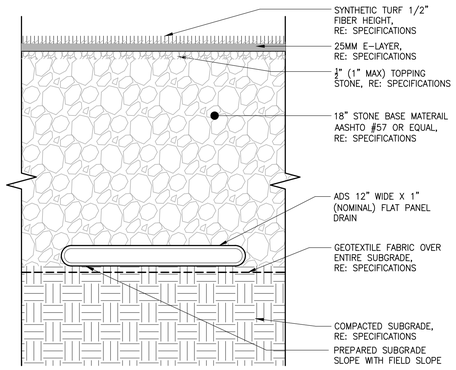

3 NEW SYNTHETIC TURF
SCALE:

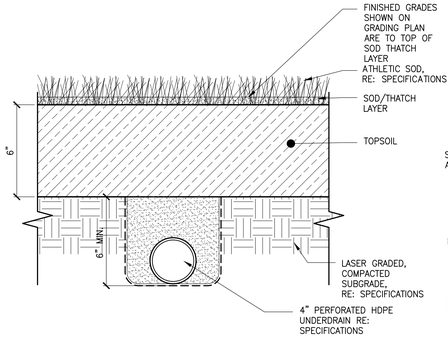

4 NATURAL GRASS UNDERDRAIN SECTION
SCALE:

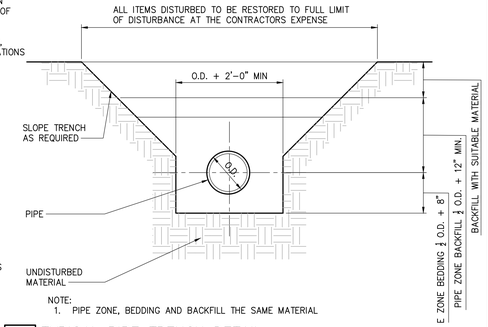

NOTE:
1. PIPE ZONE, BEDDING AND BACKFILL THE SAME MATERIAL

5 TYPICAL PIPE TRENCH DETAIL
SCALE:

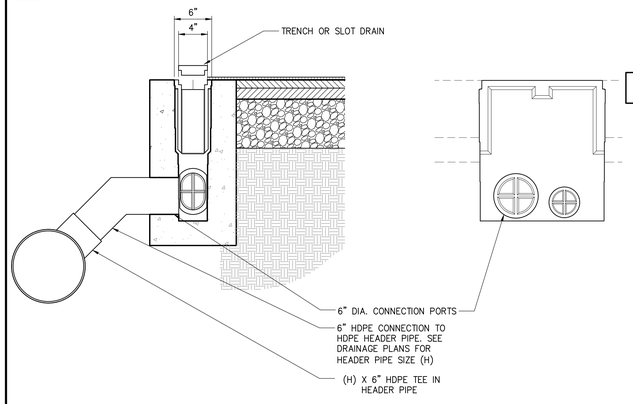

6 CHANNEL DRAIN CATCH BASIN
SCALE:

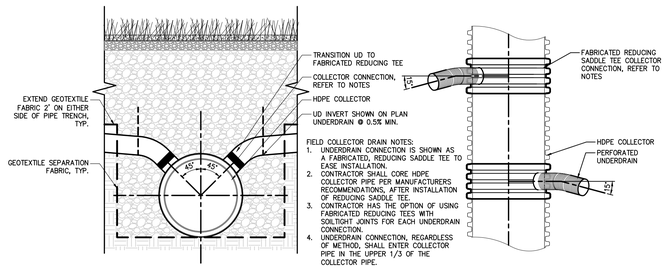

FIELD COLLECTOR DRAIN NOTES:
1. UNDERDRAIN CONNECTION IS SHOWN AS A FABRICATED, REDUCING SADDLE TEE TO EASE INSTALLATION.
2. CONTRACTOR SHALL CORE HDPE COLLECTOR PIPE PER MANUFACTURERS RECOMMENDATIONS, AFTER INSTALLATION OF REDUCING SADDLE TEE.
3. CONTRACTOR HAS THE OPTION OF USING FABRICATED REDUCING TEES WITH SOILTIGHT JOINTS FOR EACH UNDERDRAIN CONNECTION.
4. UNDERDRAIN CONNECTION, REGARDLESS OF METHOD, SHALL ENTER COLLECTOR PIPE IN THE UPPER 1/3 OF THE COLLECTOR PIPE.

7 FIELD COLLECTOR DRAIN SYSTEM
SCALE:

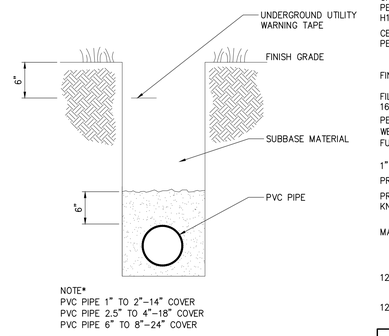

NOTE*
PVC PIPE 1" TO 2"-14" COVER
PVC PIPE 2.5" TO 4"-18" COVER
PVC PIPE 6" TO 8"-24" COVER

8 IRRIGATION TRENCH DETAIL
SCALE:

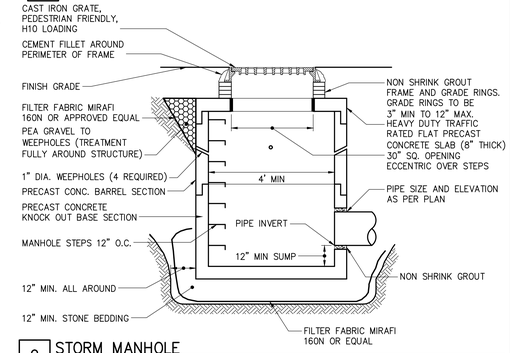

9 STORM MANHOLE
SCALE:

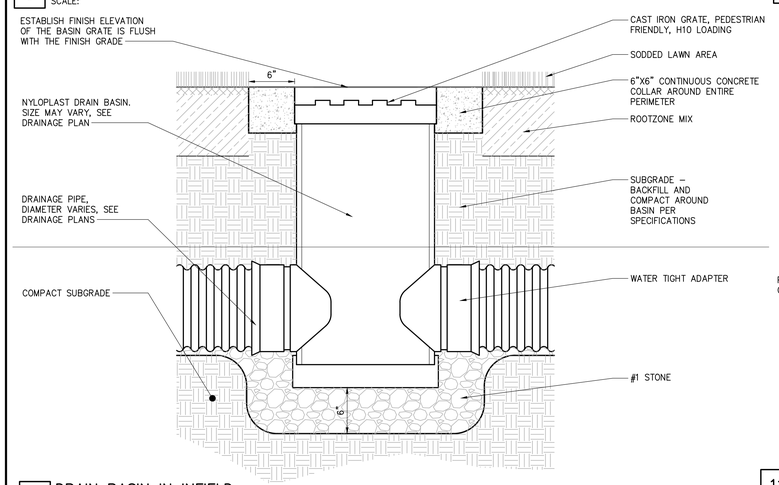

10 DRAIN BASIN IN INFIELD
SCALE:

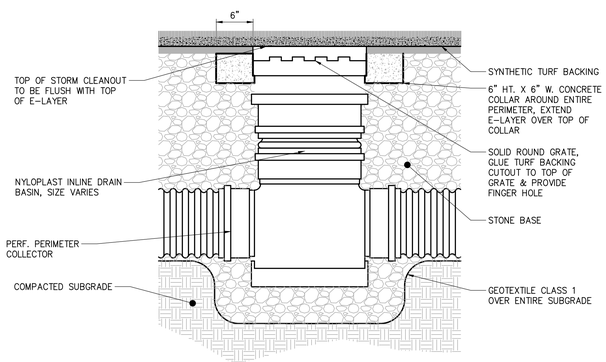

11 INLINE DRAIN CLEANOUT
SCALE:

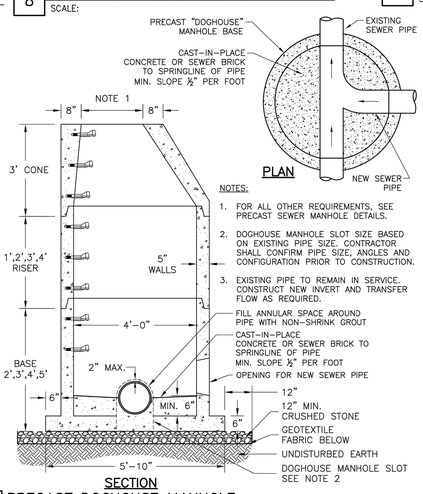

NOTES:
1. FOR ALL OTHER REQUIREMENTS, SEE PRECAST SEWER MANHOLE DETAILS.
2. DOGHOUSE MANHOLE SLOT SIZE BASED ON EXISTING PIPE SIZE. CONTRACTOR SHALL CONFIRM PIPE SIZE, ANGLES AND CONFIGURATION PRIOR TO CONSTRUCTION.
3. EXISTING PIPE TO REMAIN IN SERVICE. CONSTRUCT NEW INVERT AND TRANSFER FLOW AS REQUIRED.

12 PRECAST DOGHOUSE MANHOLE
SCALE:

RIPRAP STONE

FES NO.	X	Y	Z	STONE (ea. dim)
1	12' 13.25'	9"		6"

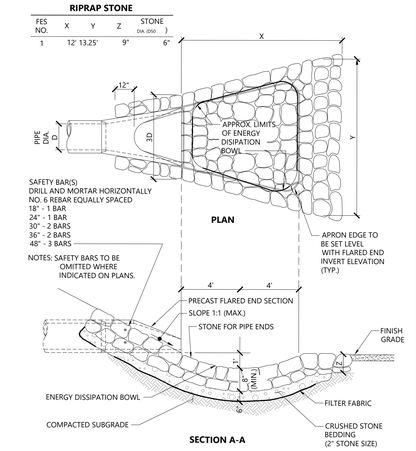

13 FLARED END SECTION WITH STONE PROTECTION
SCALE:

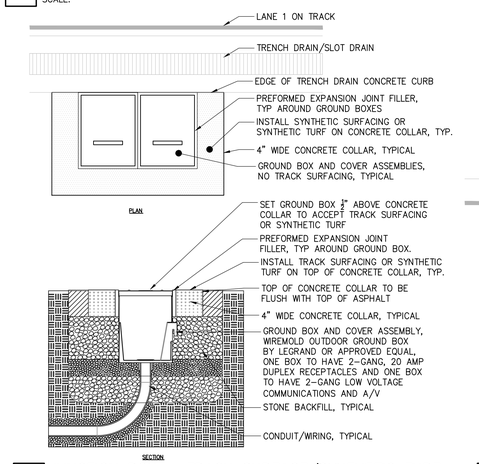

14 JUNCTION BOX – TRACK SURFACE/SYNTHETIC TURF
SCALE:

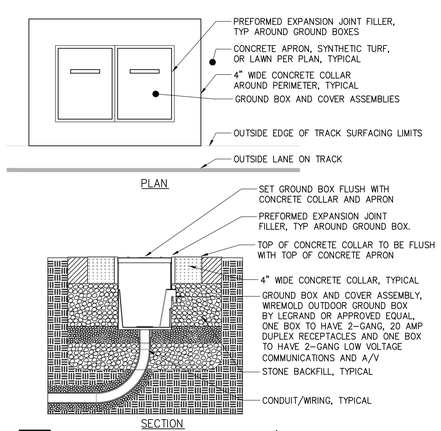

15 JUNCTION BOX – CONCRETE/LAWN
SCALE:

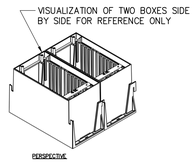

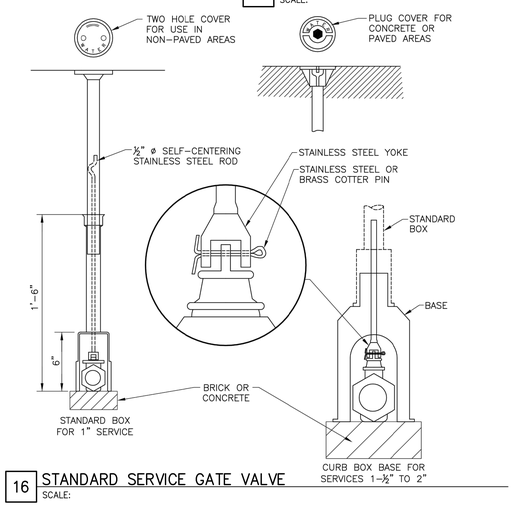

16 STANDARD SERVICE GATE VALVE
SCALE:

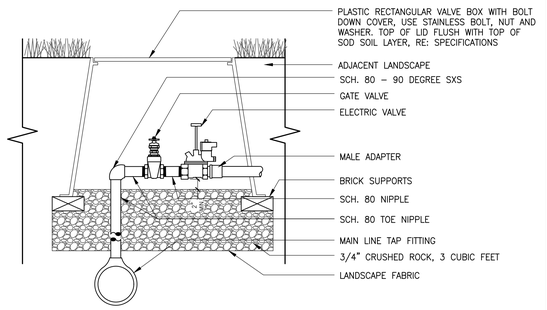

17 IRRIGATION CONTROL VALVE
SCALE:

Drawing Copyright © 2020

CHA
300 Corporate Place, Suite 110
Rocky Hill, CT 06067-1861
860.257.8557 www.chacompanies.com

University of Hartford

IT IS A VIOLATION OF LAW FOR ANY PERSON, UNLESS THEY ARE ACTING UNDER THE DIRECTION OF A LICENSED PROFESSIONAL ENGINEER, ARCHITECT, LANDSCAPE ARCHITECT OR LAND SURVEYOR TO ALTER AN ITEM IN ANY WAY. IF AN ITEM BEARING THE STAMP OF A LICENSED PROFESSIONAL IS ALTERED, THE ALTERING ENGINEER, ARCHITECT, LANDSCAPE ARCHITECT OR LAND SURVEYOR SHALL STAMP THE DOCUMENT AND INCLUDE THE NOTATION "ALTERED BY" FOLLOWED BY THEIR SIGNATURE, THE DATE OF SUCH ALTERATION, AND A SPECIFIC DESCRIPTION OF THE ALTERATION.

UNIVERSITY OF HARTFORD
ATHLETIC SPORTS COMPLEX
200 BLOOMFIELD AVE, WEST
HARTFORD, CT 06117

No.	Submittal / Revision	App'd.	By	Date

SITE DETAILS

Designed By:	Drawn By:	Checked By:
JP	JK	EO
Issue Date:	Project No:	Scale:
1/13/2023	59815	AS SHOWN

Drawing No.:
C-601

File: \\CHA-LLP.COM\PROJ\PROJECTS\ANY\K6\059815.000\09_DESIGN\DRAWINGS\01_SHEETS\C-600 SITE DETAILS.DWG
Saved: 1/11/2023 8:45:23 AM Plotted: 1/12/2023 10:25:48 AM Current User: Kenny, James (ashsvcadfp 6052

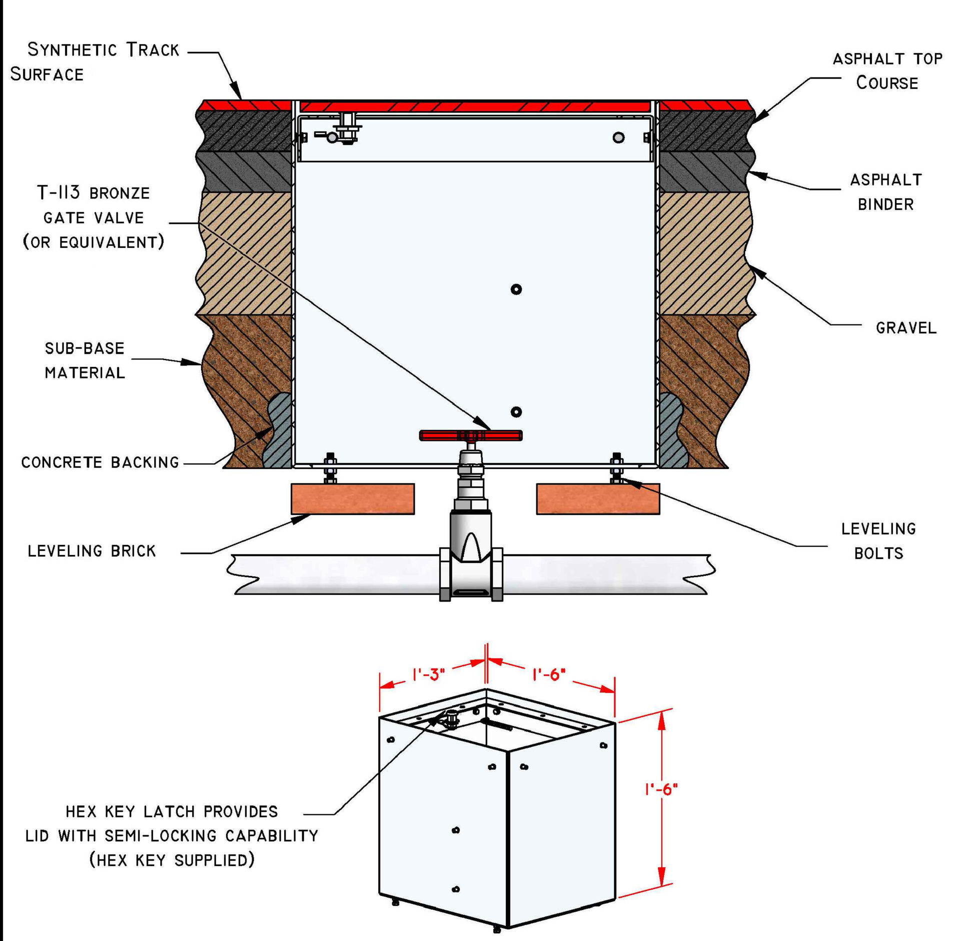

1 SYNTHETIC TRACK GATE VALVE BOX
SCALE:

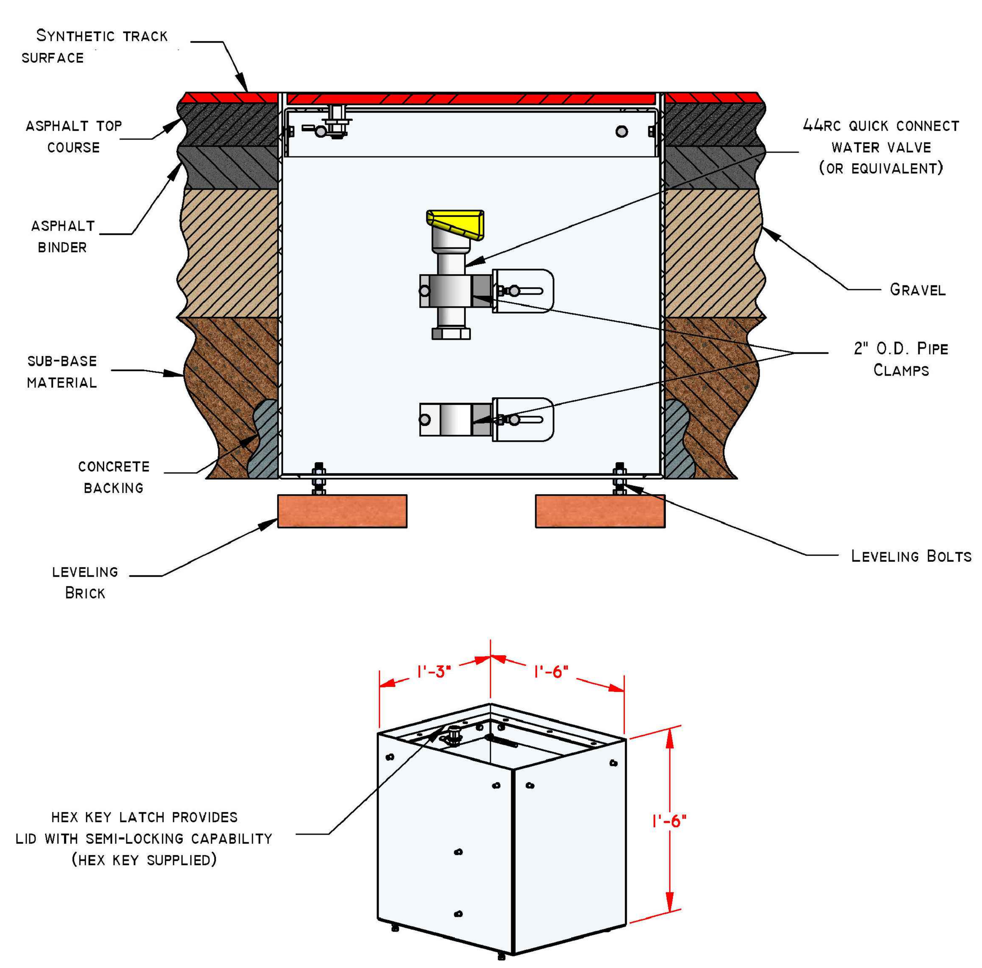

2 SYNTHETIC TRACK QUICK CONNECT VALVE BOX
SCALE:

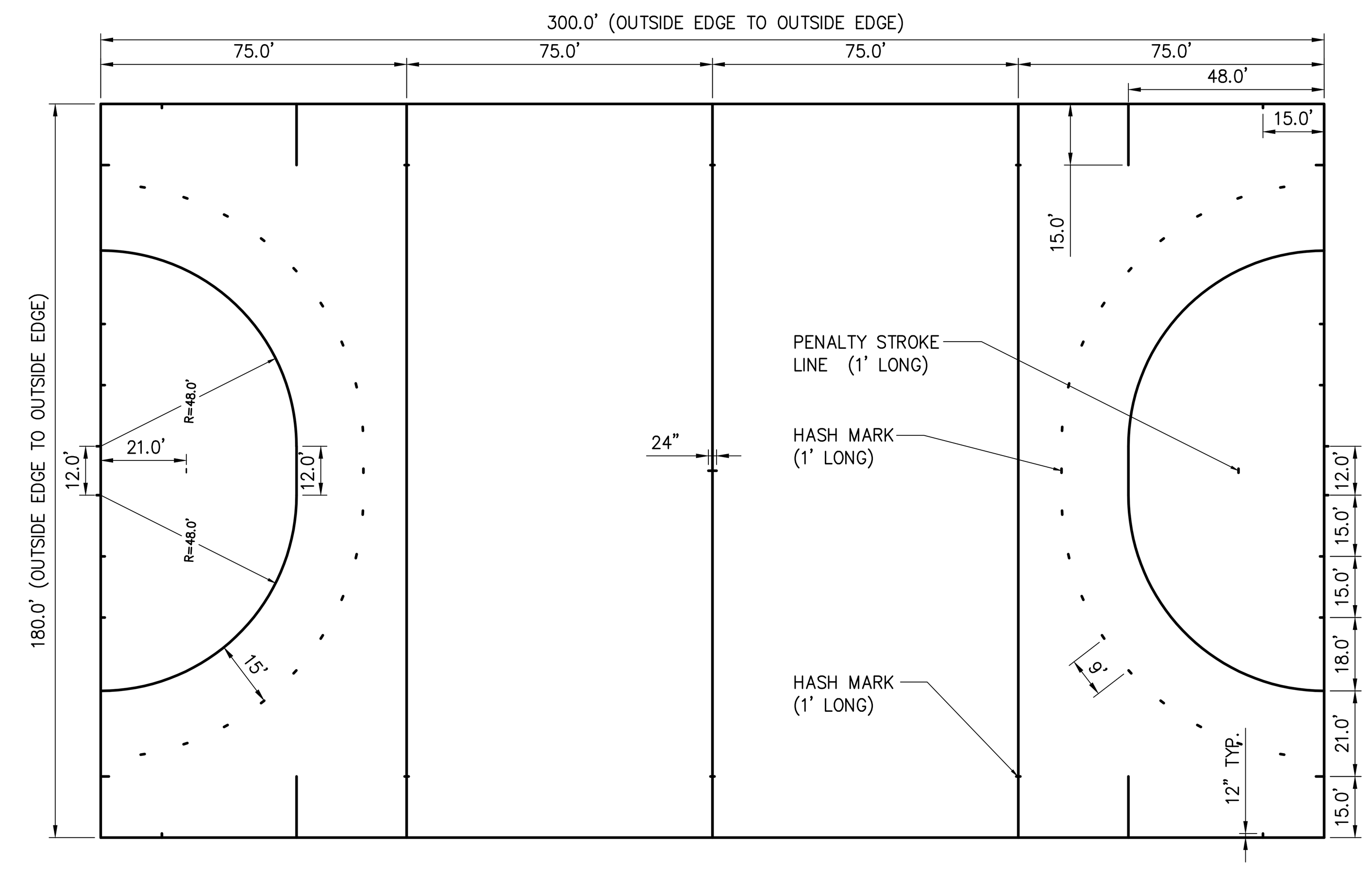

3 FIELD HOCKEY STRIPING
SCALE:

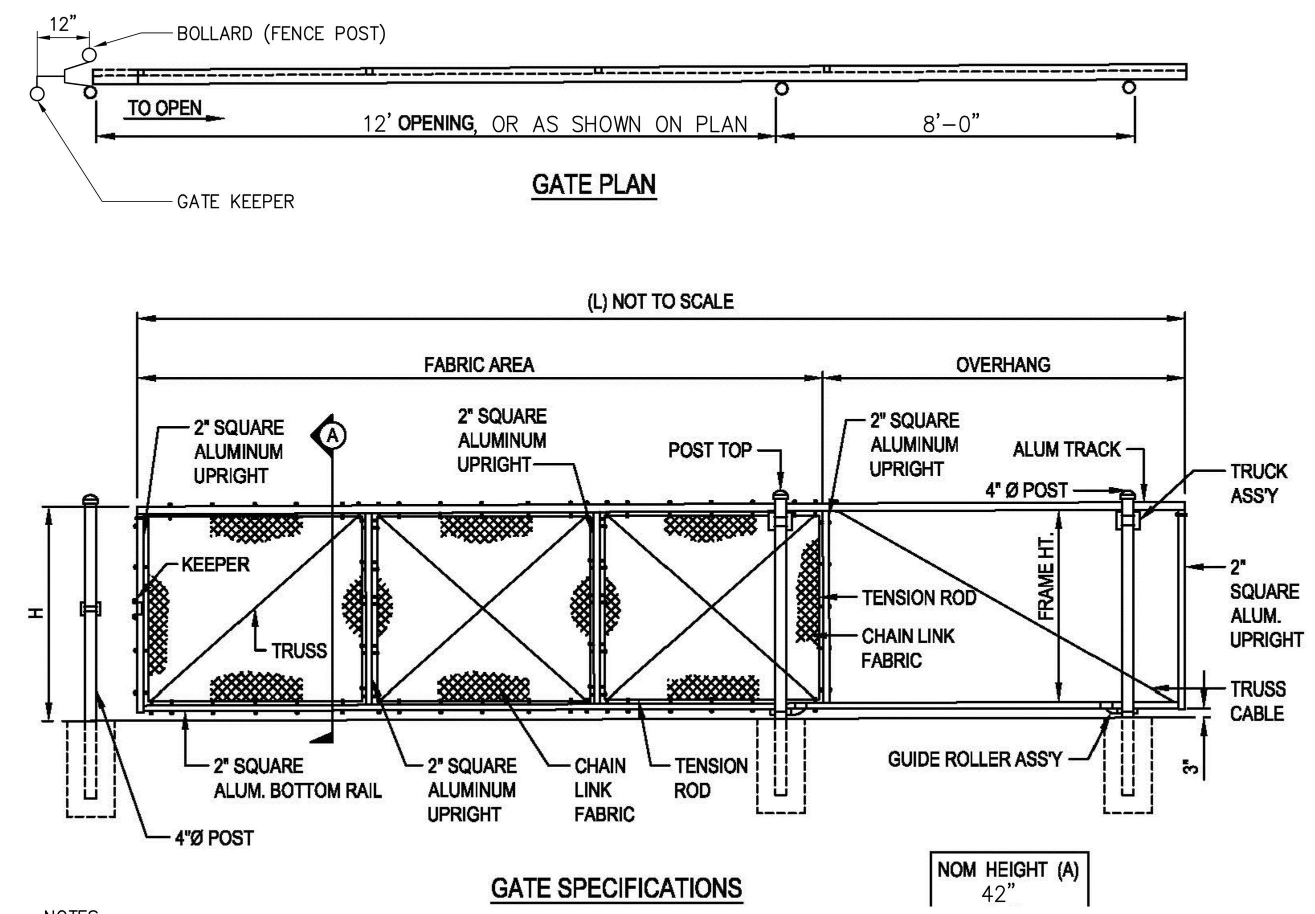

NOTES:
1. INSTALLATION TO BE COMPLETED IN ACCORDANCE WITH THE MANUFACTURER'S SPECIFICATIONS.
2. FOOTING WIDTH TO BE 4 X POST WIDTH
3. ALL FRAMING TO BE BLACK POWDER COATED AND ALL MESH TO MATCH COLOR
4. ROLLER COVERS REQUIRED

4 42" HIGH, 12' WIDE CANTILEVER SLIDE GATE
SCALE:

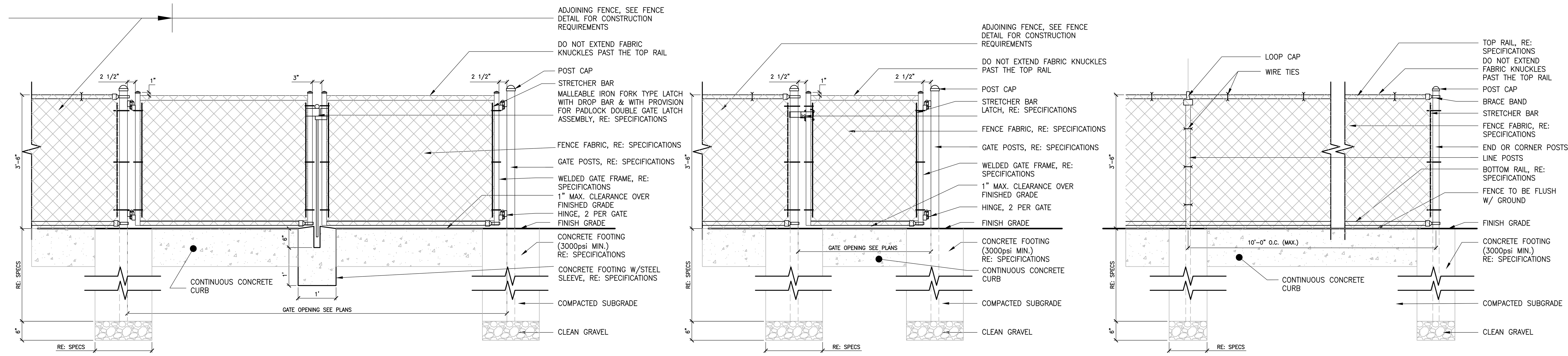

NOTES:
1. SEE SPECIFICATIONS FOR POST AND FENCE FRAME SIZING.
2. ALL POST FOOTINGS SHALL BE PER SPECIFICATIONS.
3. SEE SPECIFICATIONS FOR FENCE FINISH REQUIREMENTS.
4. HOLD DOWN TOP OF FOOTING BELOW WALK (TYP.).
5. CHAIN LINK GATES SHALL BE BLACK POWDER COATED.

5 3'-6" HEIGHT CHAIN LINK FENCE AND GATES
SCALE:

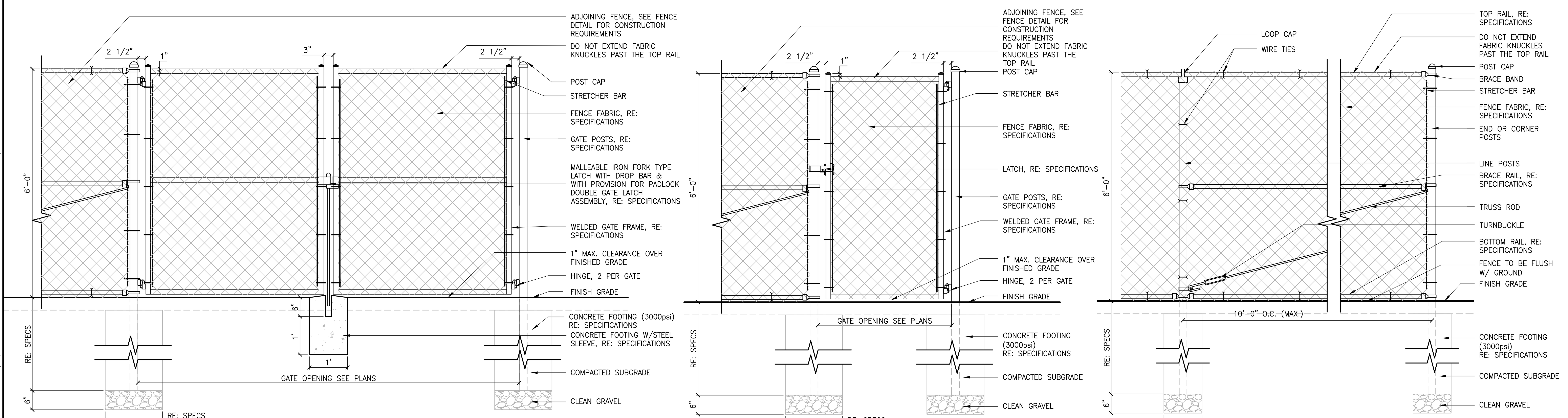

NOTES:
1. SEE SPECIFICATIONS FOR POST AND RAIL SIZING.
2. ALL POST FOOTINGS SHALL BE PER SPECIFICATIONS.
3. SEE SPECIFICATIONS FOR FENCE FINISH REQUIREMENTS.
4. HOLD DOWN TOP OF FOOTING BELOW FIELD CURB OR ADJACENT PAVEMENT (TYP).

6 6' HEIGHT CHAIN LINK FENCE AND GATES
SCALE:

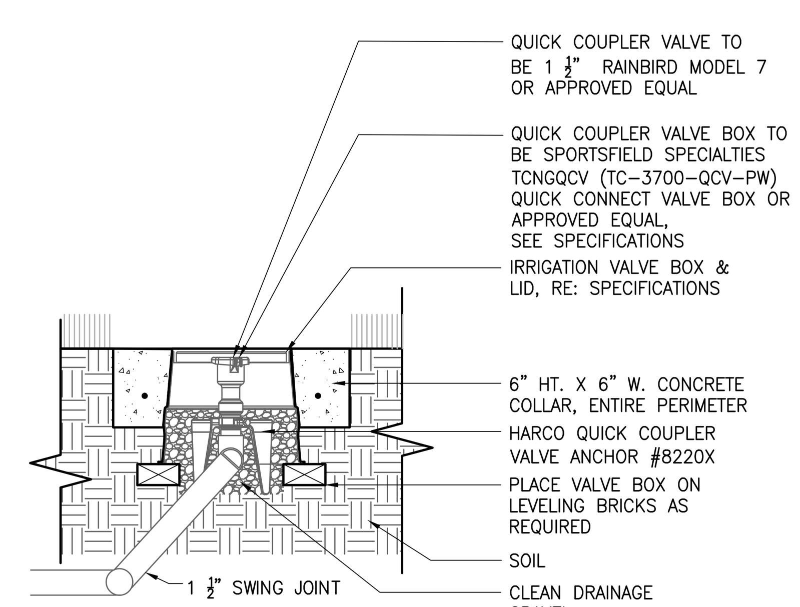

7 QUICK COUPLER DETAIL
SCALE:

Drawing Copyright © 2020

CHA
200 Corporate Place, Suite 110
Rocky Hill, CT 06067-1861
860.257.4557 · www.chacompanies.com

University of Hartford

IT IS A VIOLATION OF LAW FOR ANY PERSON, UNLESS THEY ARE ACTING UNDER THE DIRECTION OF A LICENSED PROFESSIONAL ENGINEER, ARCHITECT, LANDSCAPE ARCHITECT OR LAND SURVEYOR TO ALTER AN ITEM IN ANY WAY. IF AN ITEM BEARING THE STAMP OF A LICENSED PROFESSIONAL IS ALTERED, THE ALTERING ENGINEER, ARCHITECT, LANDSCAPE ARCHITECT OR LAND SURVEYOR SHALL STAMP THE DOCUMENT AND INCLUDE THE NOTATION "ALTERED BY" FOLLOWED BY THEIR SIGNATURE, THE DATE OF SUCH ALTERATION, AND A SPECIFIC DESCRIPTION OF THE ALTERATION.

UNIVERSITY OF HARTFORD
ATHLETIC SPORTS COMPLEX
200 BLOOMFIELD AVE, WEST HARTFORD, CT 06117

No.	Submittal / Revision	App'd.	By	Date

SITE DETAILS

Designed By:	Drawn By:	Checked By:
JP	JK	EO
Issue Date:	Project No:	Scale:
1/13/2023	59815	AS SHOWN

Drawing No.:
C-602

File: \\CHA-LLP.COM\PROJ\PROJECTS\ANY\K6\059815.000\09_DESIGN\DRAWINGS\01_SHEETS\C-600 SITE DETAILS.DWG
Saved: 1/11/2023 8:48:23 AM Plotted: 1/12/2023 10:26:07 AM Current User: Kinney, James LastSavedBy: 6052

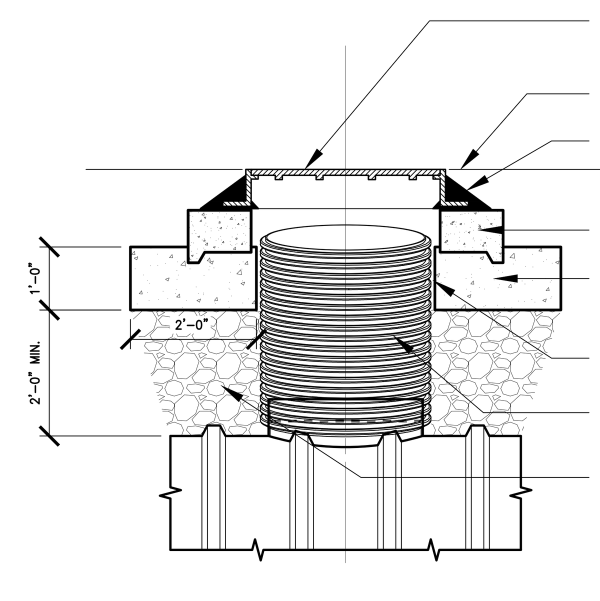

NOTE:
USE 36" COVER FOR 30" RISER
USE 30" COVER FOR 24" RISER

1 ACCESS OPENING COVER
SCALE: N.T.S.

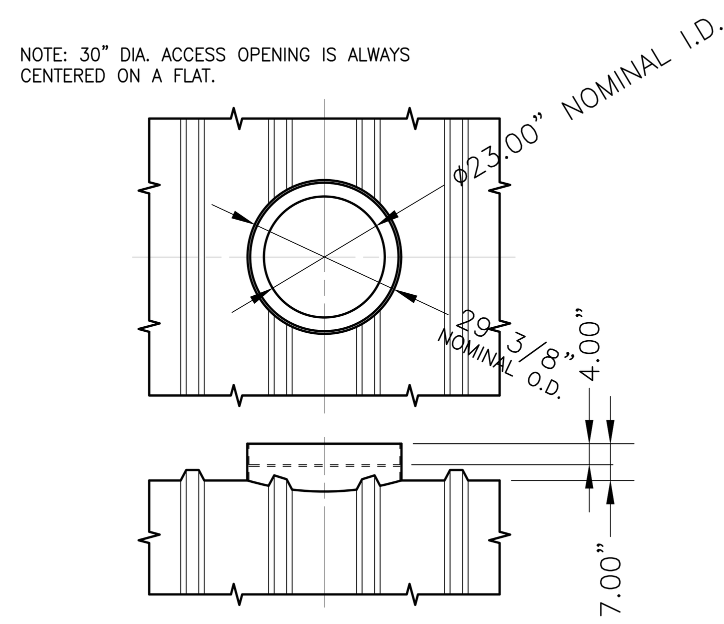

2 ACCESS OPENING W/ INTEGRAL FLANGE
SCALE: N.T.S.

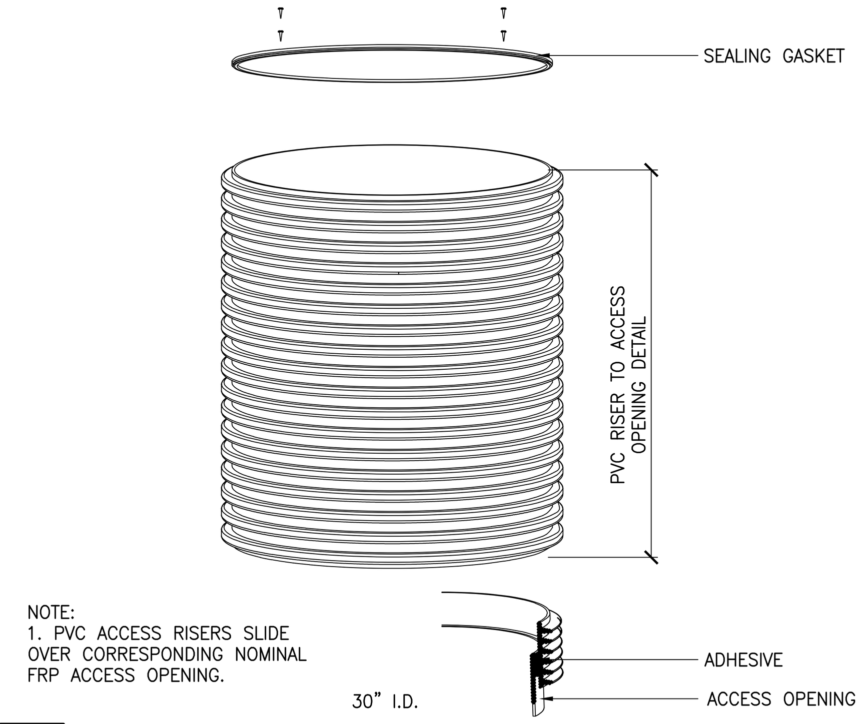

NOTE:
1. PVC ACCESS RISERS SLIDE OVER CORRESPONDING NOMINAL FRP ACCESS OPENING.

3 PVC RISER WITH FRP COVER
SCALE:

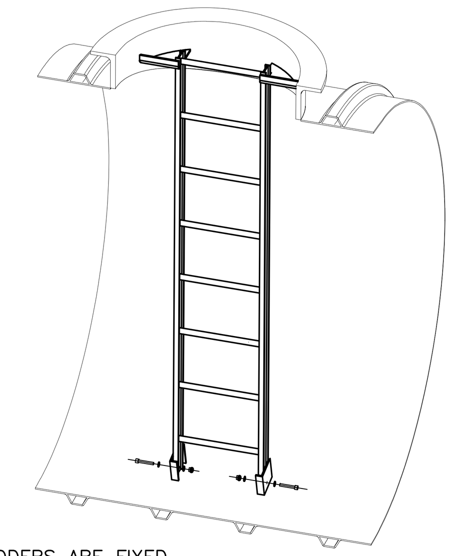

NOTE: 16" WIDE LADDERS ARE FIXED TO THE TANK IN 30" DIA. ACCESS OPENINGS

4 FIXED FIBERGLASS LADDER
SCALE:

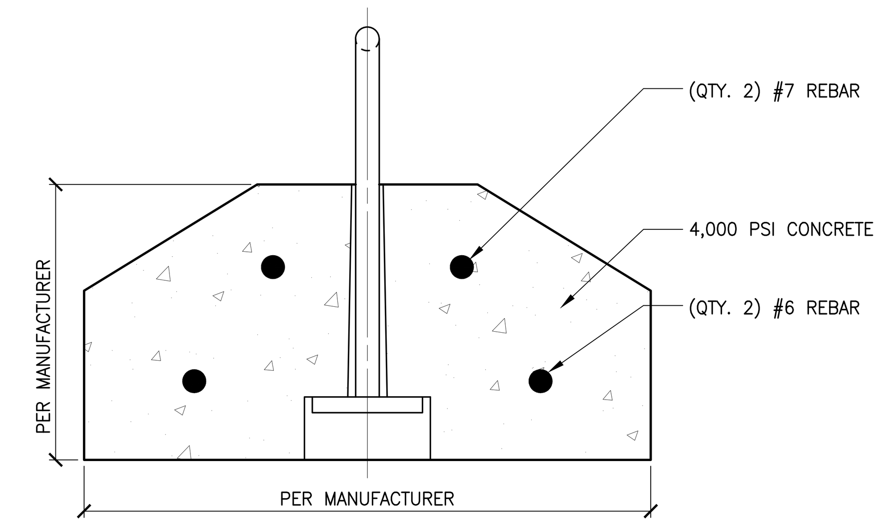

5 PRECAST DEADMAN FOR 10' DIA. TANK
SCALE:

WATER RE-USE TANK NOTES:

1. WATER RE-USE TANK SHALL BE A XERXES 10' DIAMETER 20,000 GALLON TANK, OR APPROVED EQUIVALENT SINGLE WALL FIBERGLASS TANK.

2. WATER RE-USE TANK SHALL INCLUDE ALL ACCESSORIES INCLUDING DEADMAN, DEADMAN HOLD DOWN STRAPS AND CONNECTIONS, ACCESS MANHOLES, RISERS, PUMP PLATFORM, ACCESS OPENINGS, FIBERGLASS LADDER, TANK INLET(S), INLET TEE AND ELBOWS, OVERFLOW CONNECTION AND ACCOMMODATIONS FOR PUMP OUTLET PIPING, INTAKE AND CONTROLS.

3. BUOYANCY CALCULATIONS AND DEADMAN SIZING SHALL BE SUBMITTED AND STAMPED BY A VIRGINIA PROFESSIONAL ENGINEER WITH THE TANK SUBMITTAL.

4. TANK SHALL HAVE A MINIMUM OF TWO OPENINGS, ONE 24" DIAMETER OPENING AND ONE 30" OPENING. 30" DIAMETER ACCESS OPENING SHALL HAVE A PERMANENT LADDER.

5. BACKFILL TANK PER MANUFACTURER'S RECOMMENDATIONS.

6. DETAILS SHOWN ARE BASED ON XERXES TANK AND ACCESSORIES.

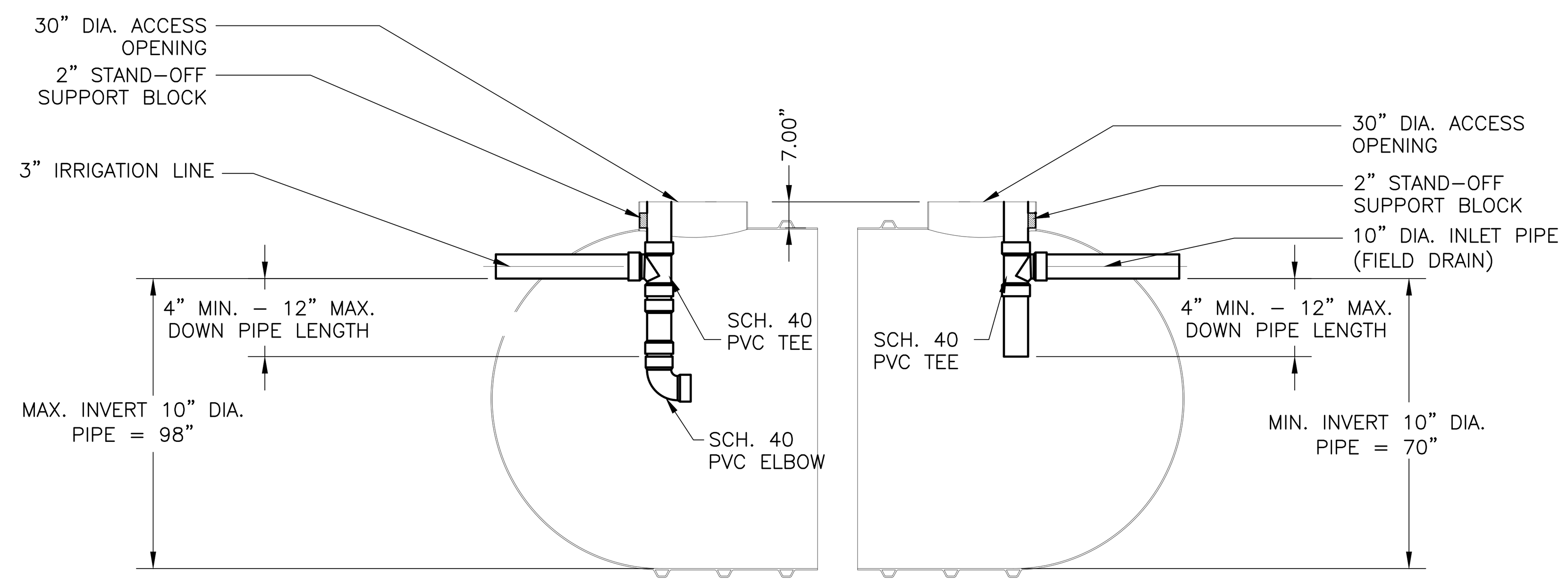

6 INLET & OUTLET PIPE DETAIL
SCALE:

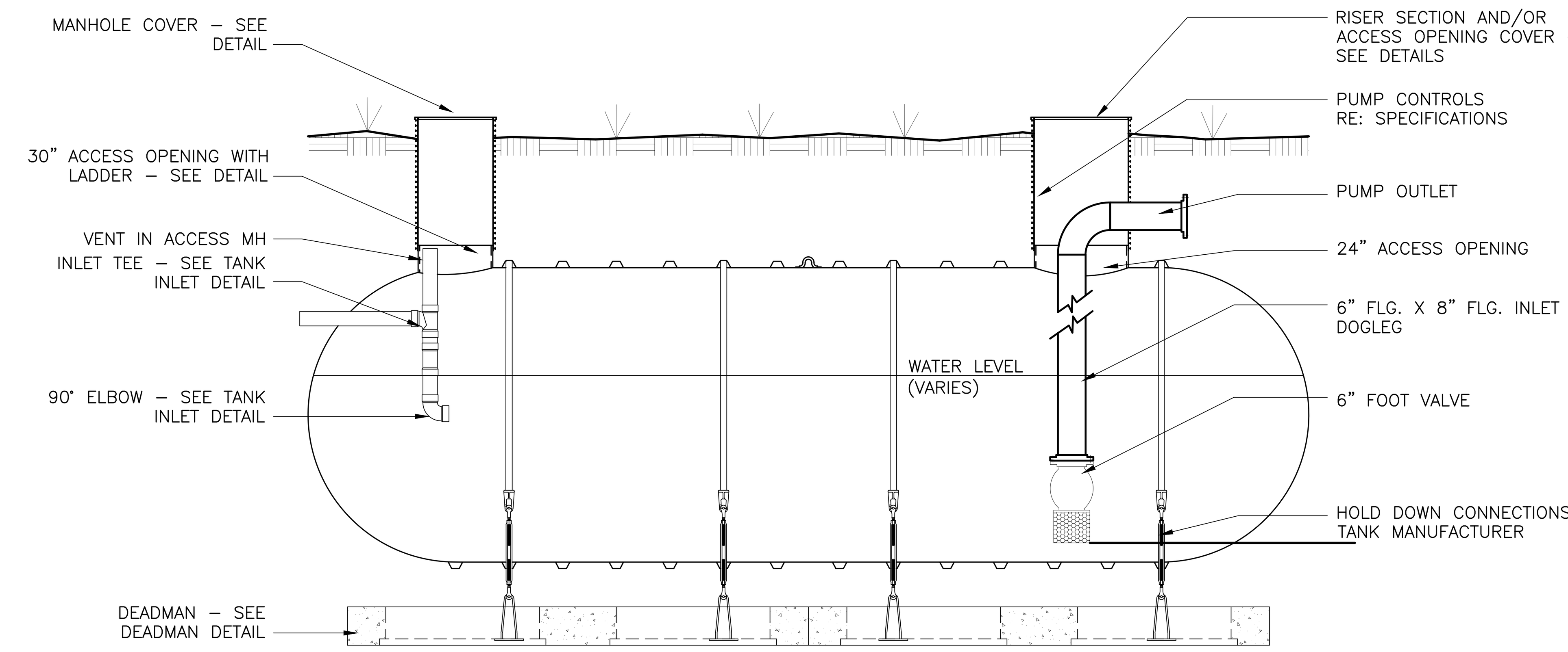

7 TYPICAL TANK COMPONENTS
SCALE:

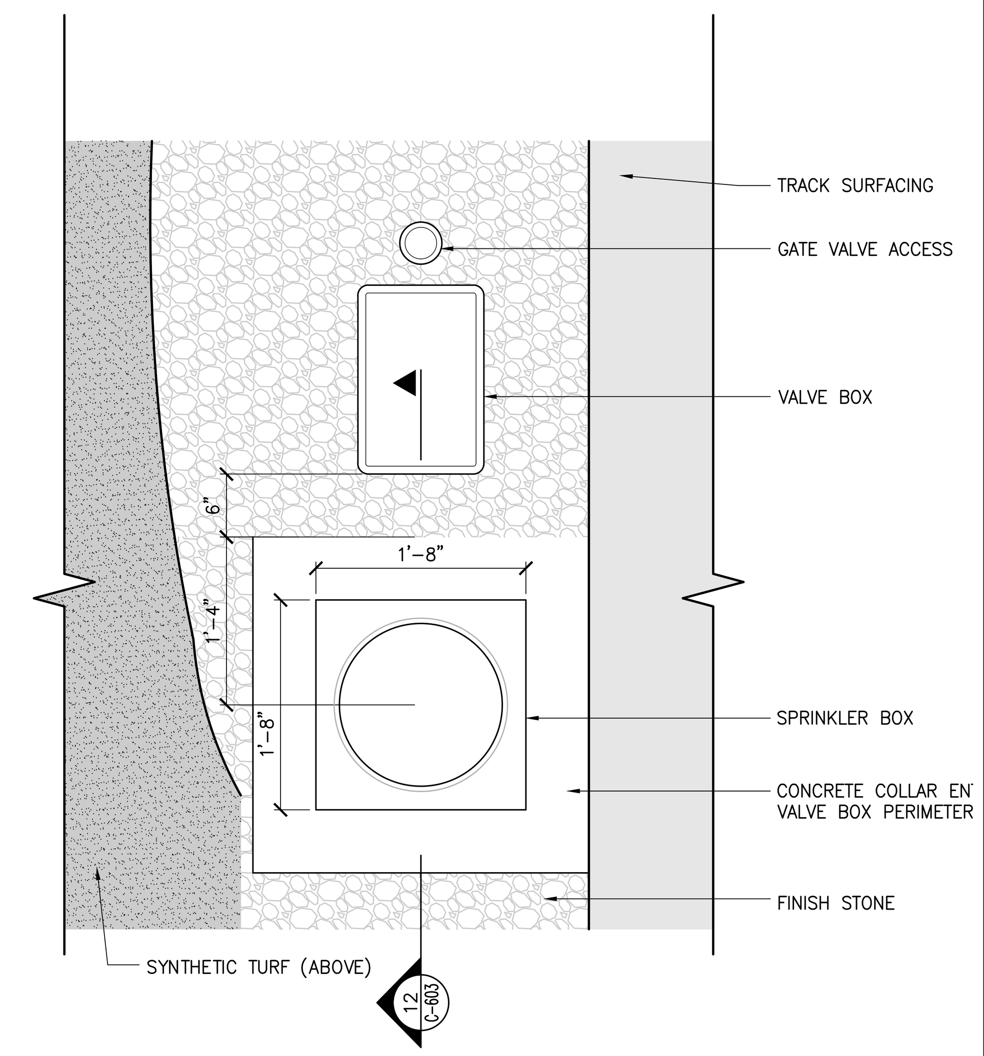

8 IRRIGATION HEAD & VALVE BOX- PLAN
SCALE:

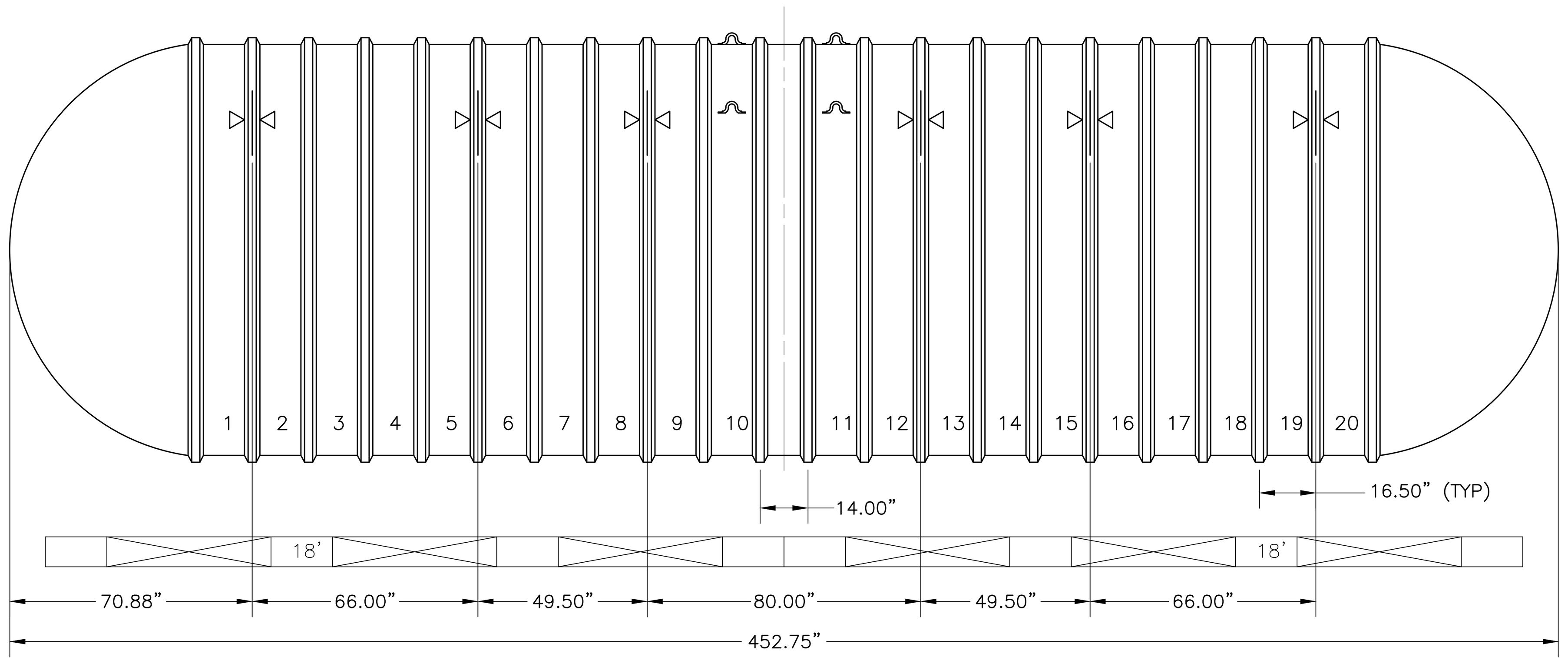

9 20.000 GALLON CISTERN/ RAINWATER HARVESTING TANK
SCALE:

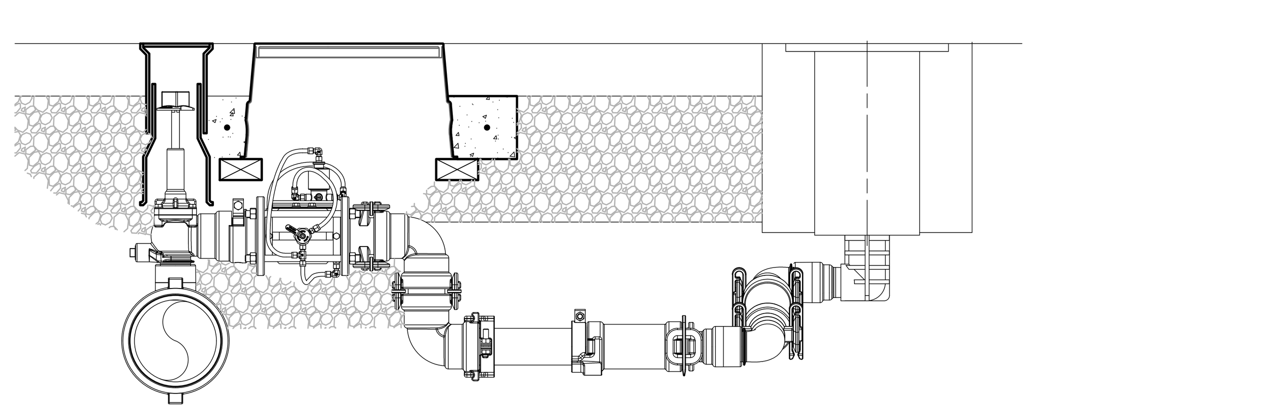

10 IRRIGATION VALVE- SECTION
SCALE:

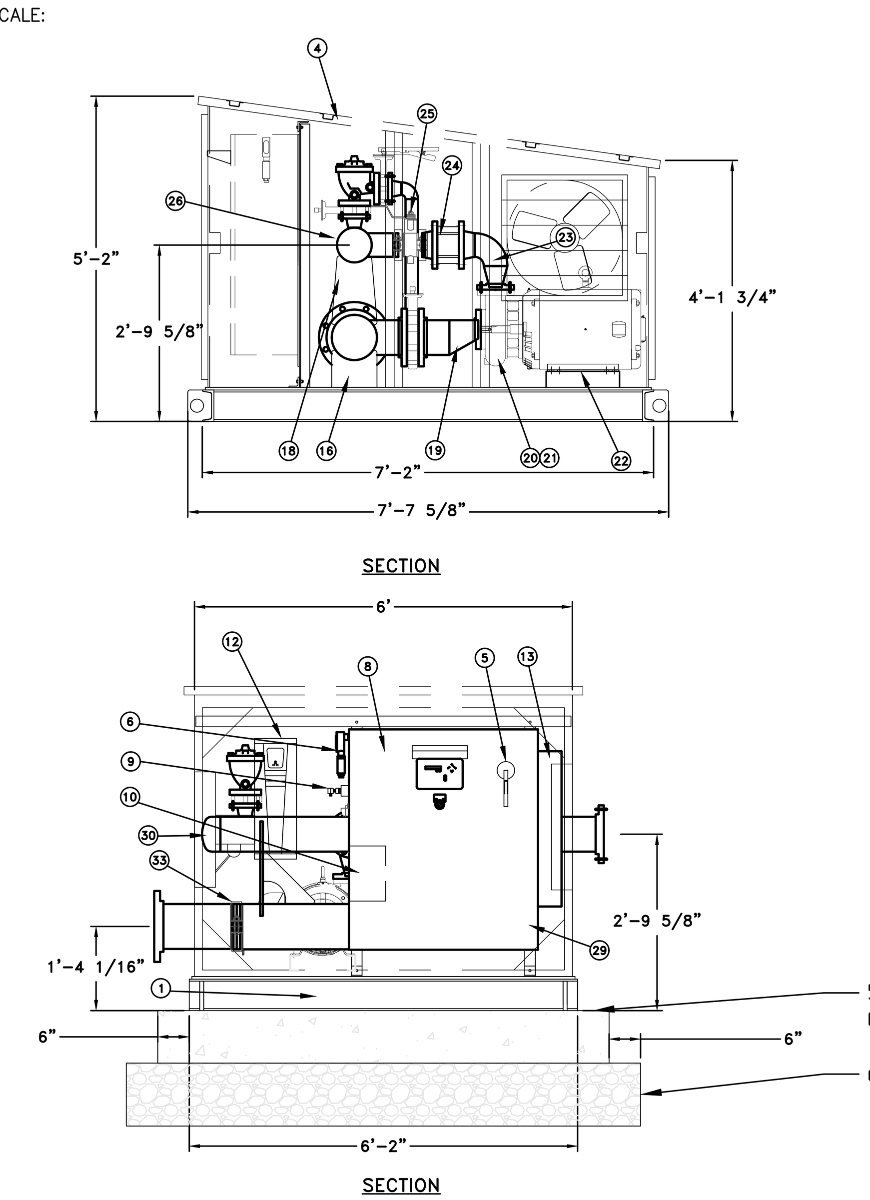

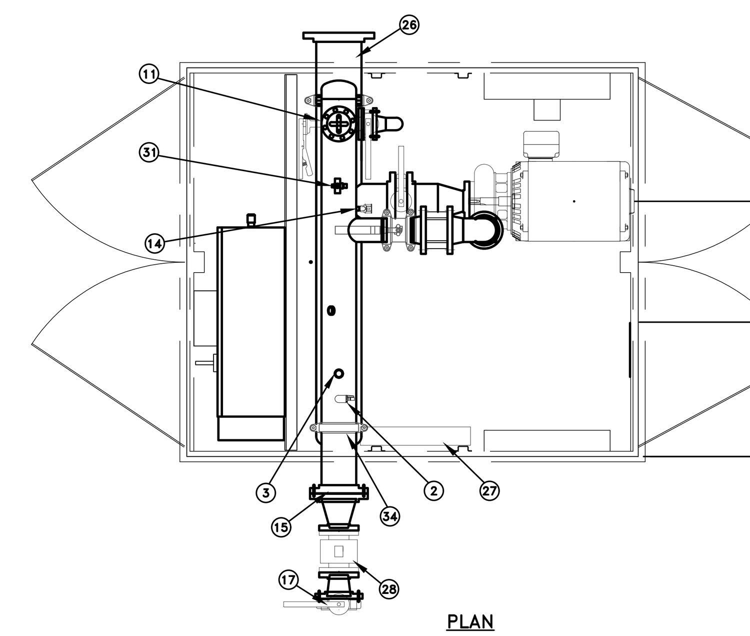

	BOM	DESCRIPTION	QTY
1		SKID, FLOBOY LT, ALUMINUM	1
2		EFFECTOR FLOW SWITCH	1
3		SENSOR, LOP	1
4		ENCLOSURE, FLOBOY LT, ALUMINUM	1
5		DISCONNECT	1
6		ARRESTOR, SURGE	1
7		NA	
8		CONTROL ENCLOSURE	1
9		TRANSDUCER, PRESSURE	1
10		TRANSFORMER 1.5KVA	1
11		DOWN STREAM RELIEF, 2"	1
12		VFD, 550	1
13		EXCHANGER, HEAT	1
14		REPRIME, CRD	1
15		DISCHARGE, FLANGE, 6"	1
16		SADDLE, 8" PIPE	2
17		VALVE, 4" ISO	1
18		SADDLE, 8"X6" PIPE	2
19		REDUCER, ECC., 6" X 3"	2
20		PUMP, GOULDS 2.5X3-9	2
21		SENSOR, THERMAL	2
22		MOTOR, 40 HP	2
23		ELBOW, S.R., 90, 4"	2
24		VALVE, 4" CHECK	2
25		VALVE, 4" VIC ISO	2
26		MANIFOLD, 6" DISCHARGE	1
27		HEATER, 500 WATT	1
28		FLOWMETER, 3", KROHNE, W/O DISPLAY	1
29		CAP, WELD, 8", (BEHIND PANEL)	1
30		CAP, WELD, 6"	1
31		GAUGE, PRESS	1
32		1" THREADOLET FOR WINTER BLOWOUT	1
33		COUPLING, ANVIL, 8"	1
34		COUPLING, ANVIL, 6"	1

NOTES:
1. *42" PANEL CLEARANCE AS REQUIRED BY NEC CODE.
2. SKID AND ENCLOSURE ALUMINUM
3. SADDLES ARE DETACHABLE.
4. ESTIMATED HEAVIEST LIFT WEIGHT: 3,300#

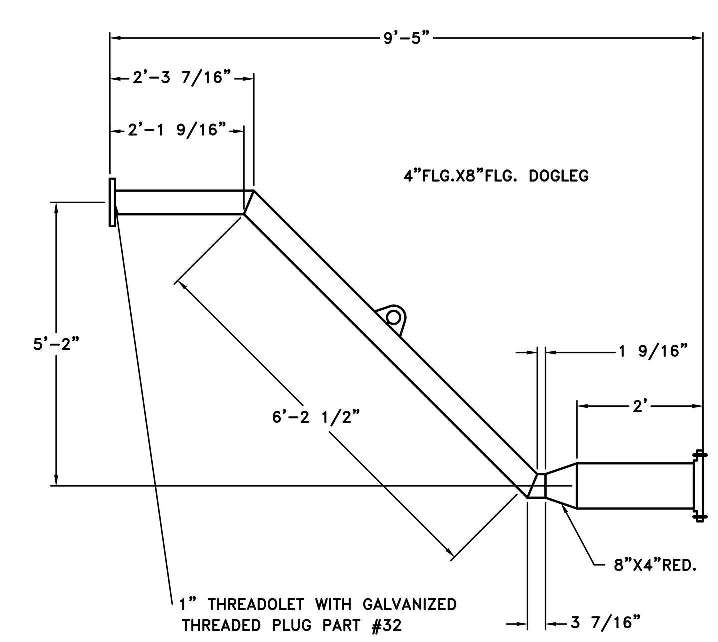

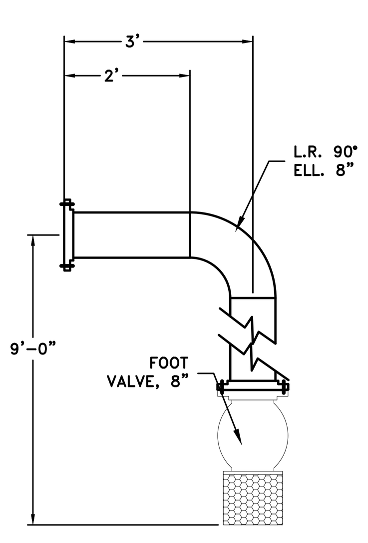

STATION STYLE:	VLCP-420-1-110
TO PRODUCE:	420 GPM @ 110 PSI
INLET PRESSURE:	N/A
DISCHARGE PRESSURE:	110 PSI
HORSEPOWERS:	(PM) NA (1-2) 40
PUMP SUCTION ISO. VALVES:	(PM) (1-2) 6"
PUMP DISCHARGE ISO. VALVES:	(PM) (1-2) 4"
PUMP CHECK VALVE SIZES:	(PM) (1-2) 4"
POWER CONDITIONER:	NA
POWER PACK:	NA
HEATER:	NA
MAIN DISCONNECT:	200 AMPS
POWER REQUIREMENTS:	189 KVA 460V, 60 HZ, 3 Phase
EXHAUST FAN REQUIREMENTS:	Total to be 1280 CFM

11 BOOSTER PUMP
SCALE:

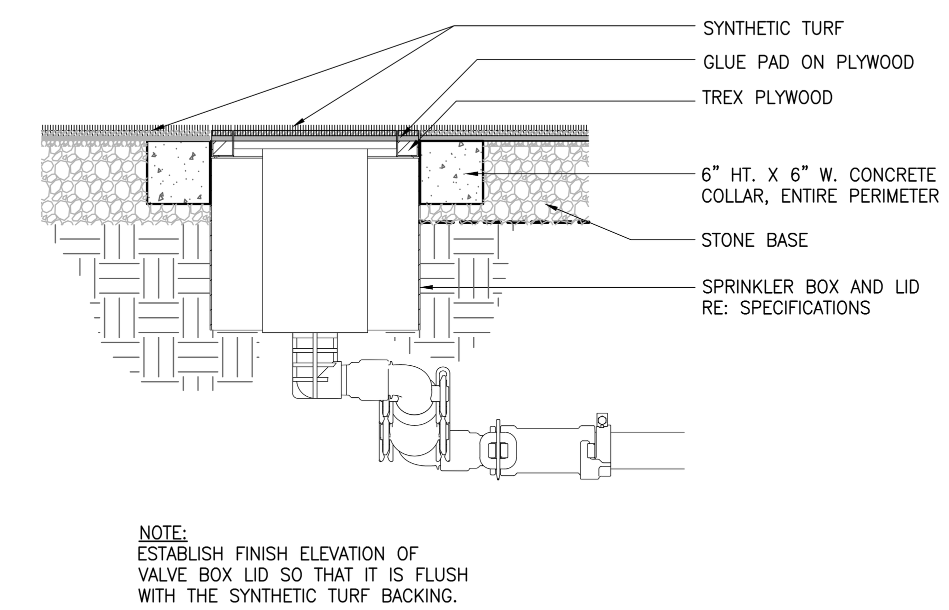

NOTE:
ESTABLISH FINISH ELEVATION OF VALVE BOX LID SO THAT IT IS FLUSH WITH THE SYNTHETIC TURF BACKING.

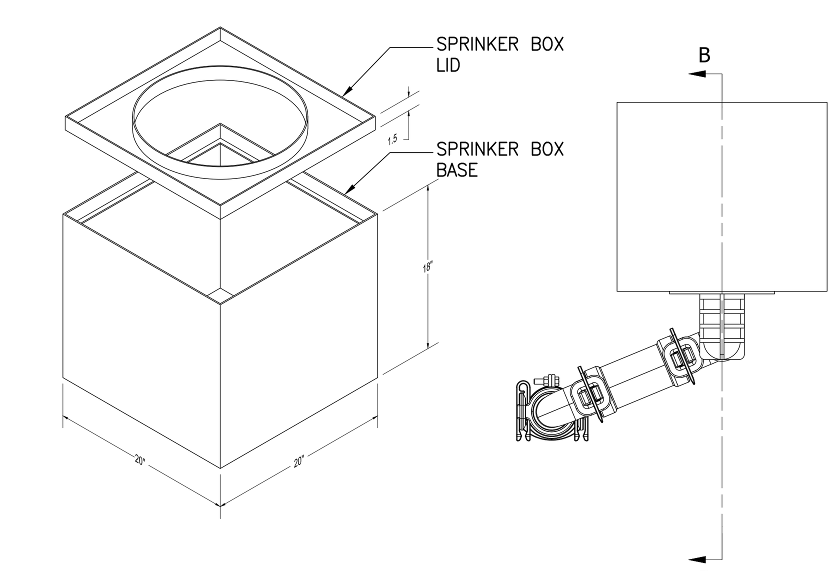

12 IRRIGATION HEAD & BOX- SECTION
SCALE:

Drawing Copyright © 2020

CHA
200 Corporate Place, Suite 110
Rocky Hill, CT 06067-1861
860.257.4557 · www.chacompanies.com

University of Hartford

IT IS A VIOLATION OF LAW FOR ANY PERSON, UNLESS THEY ARE ACTING UNDER THE DIRECTION OF A LICENSED PROFESSIONAL ENGINEER, ARCHITECT, LANDSCAPE ARCHITECT OR LAND SURVEYOR TO ALTER AN ITEM IN ANY WAY. IF AN ITEM BEARING THE STAMP OF A LICENSED PROFESSIONAL IS ALTERED, THE ALTERING ENGINEER, ARCHITECT, LANDSCAPE ARCHITECT OR LAND SURVEYOR SHALL STAMP THE DOCUMENT AND INCLUDE THE NOTATION "ALTERED BY" FOLLOWED BY THEIR SIGNATURE, THE DATE OF SUCH ALTERATION, AND A SPECIFIC DESCRIPTION OF THE ALTERATION.

UNIVERSITY OF HARTFORD
ATHLETIC SPORTS COMPLEX
200 BLOOMFIELD AVE, WEST HARTFORD, CT 06117

No.	Submittal / Revision	App'd.	By	Date

SITE DETAILS

Designed By:	Drawn By:	Checked By:
JP	JK	EO
Issue Date:	Project No:	Scale:
1/13/2023	59815	AS SHOWN

Drawing No.:
C-603

File: \\CHA-LLP.COM\PROJ\PROJECTS\ANYVAS\059815\000\05_DESIGN\DRAWINGS\01_SHEETS\C-600 SITE DETAILS.DWG
Saved: 1/11/2023 8:48:23 AM Plotted: 1/12/2023 10:26:36 AM Current User: Kinney, James LastSavedBy: 6052

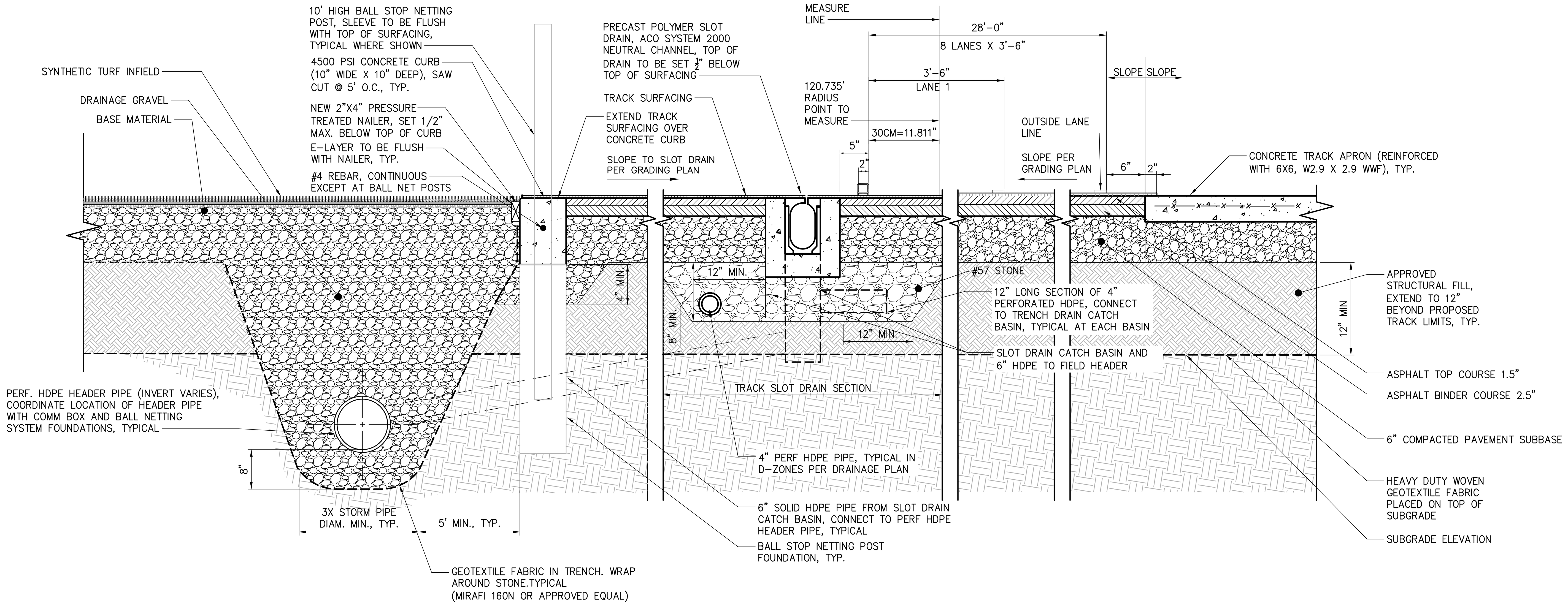

1 TRACK CROSS SECTION AT FIELD EVENT AREAS AND SLOT DRAIN
SCALE:

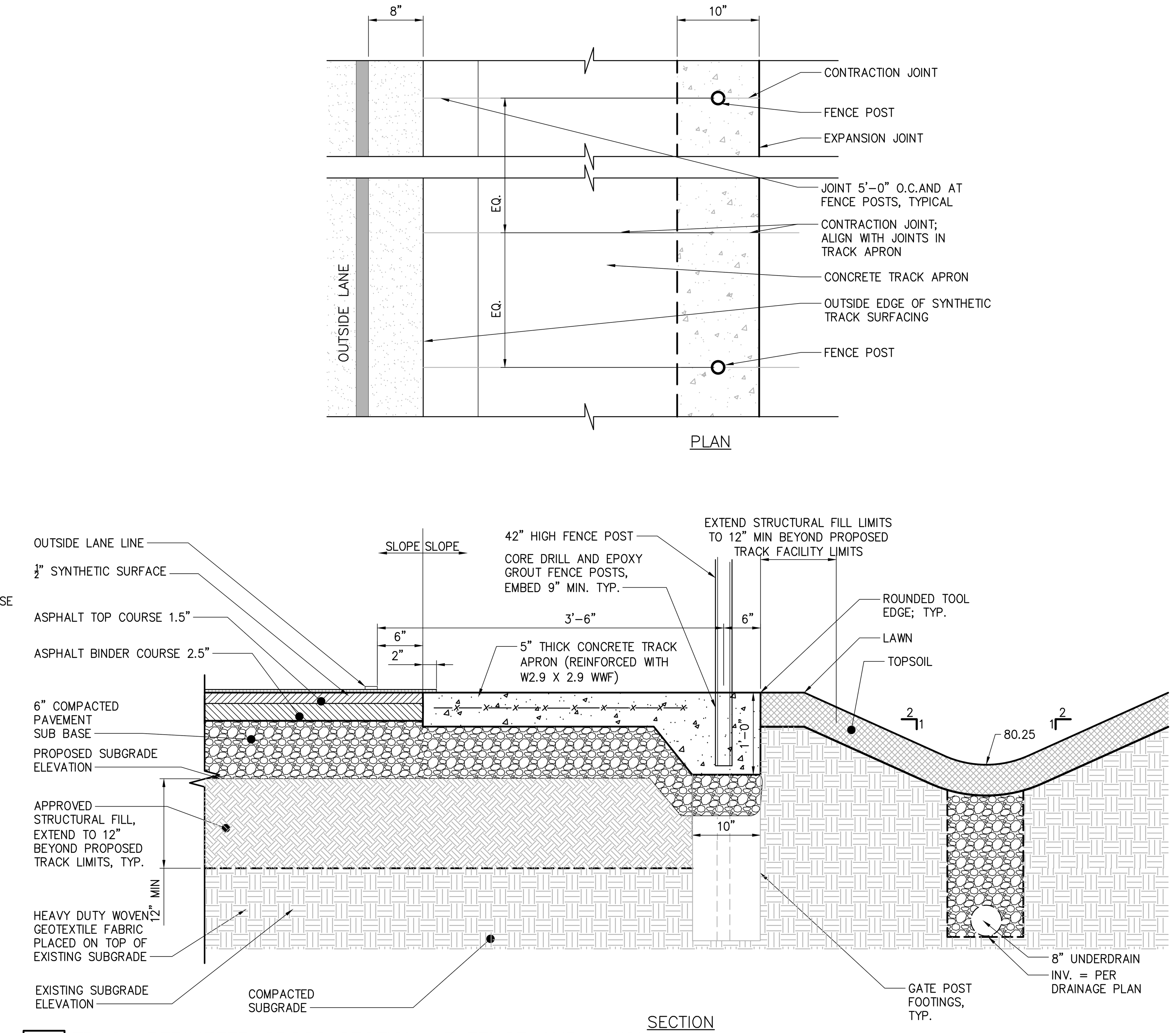

2 TRACK PERIMETER CROSS SECTION AT FENCE AND LAWN
SCALE:

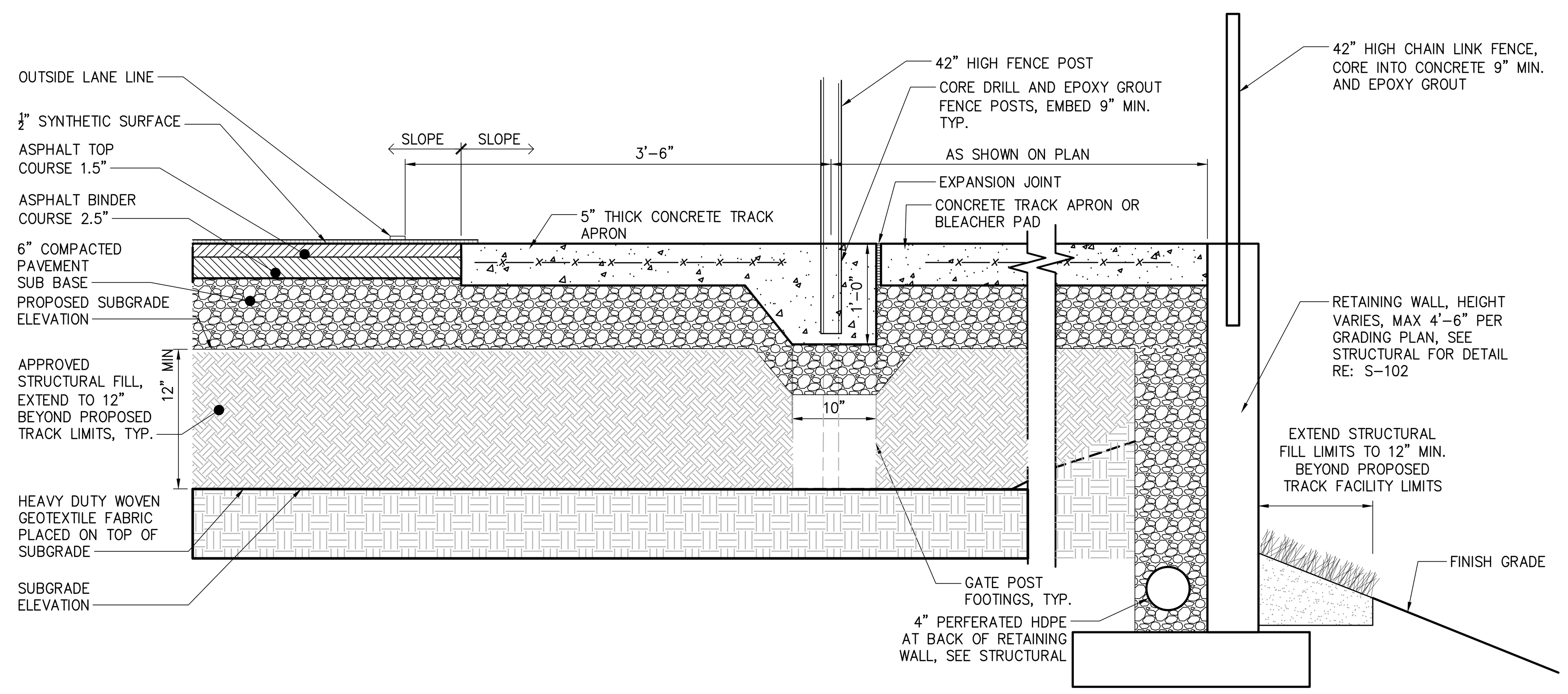

3 TRACK PERIMETER CROSS SECTION AT FENCE AND RETAINING WALL
SCALE:

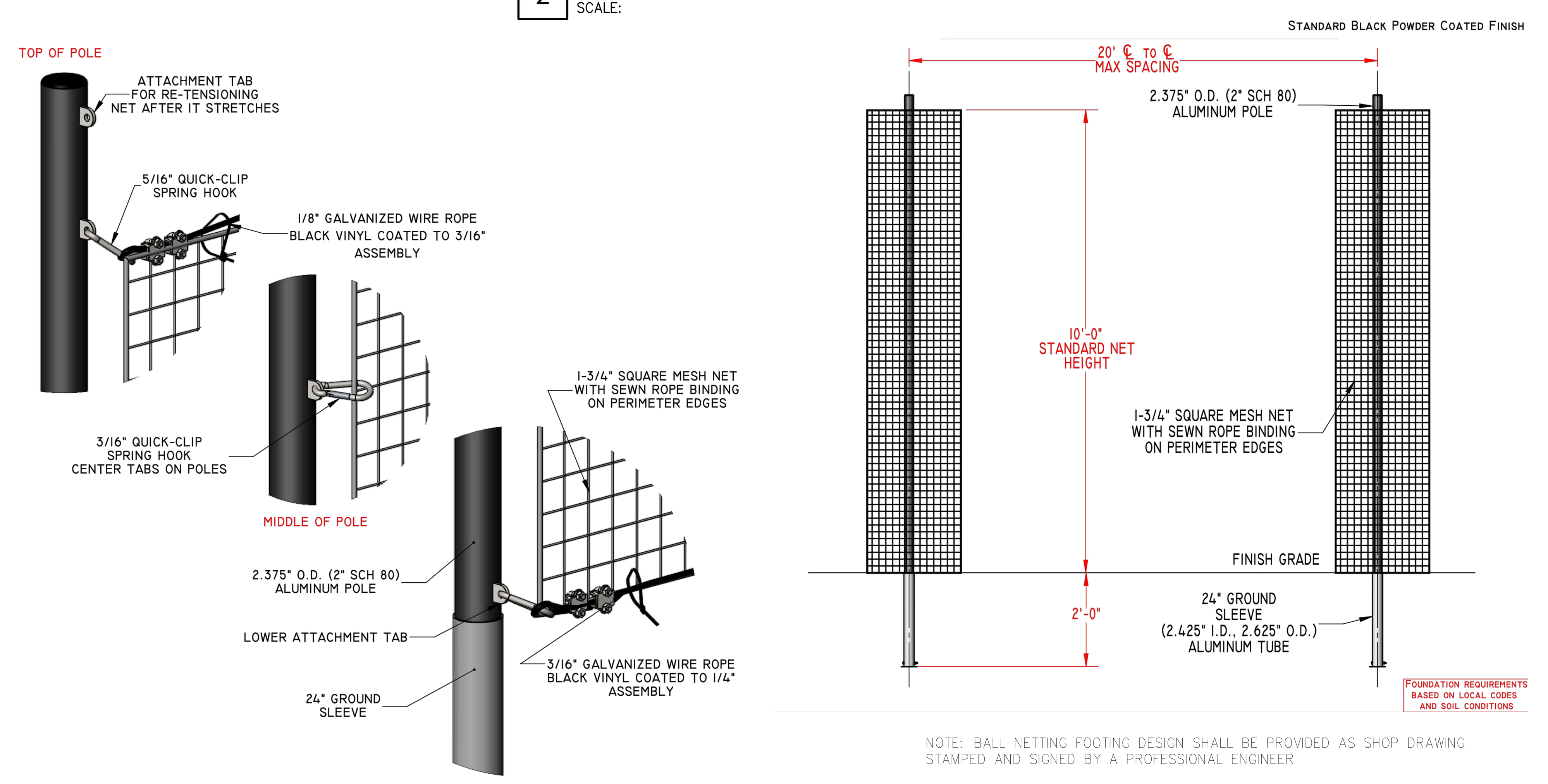

NOTE: BALL NETTING FOOTING DESIGN SHALL BE PROVIDED AS SHOP DRAWING STAMPED AND SIGNED BY A PROFESSIONAL ENGINEER

4 10' HIGH BALL STOP NETTING SYSTEM DETAIL
SCALE:

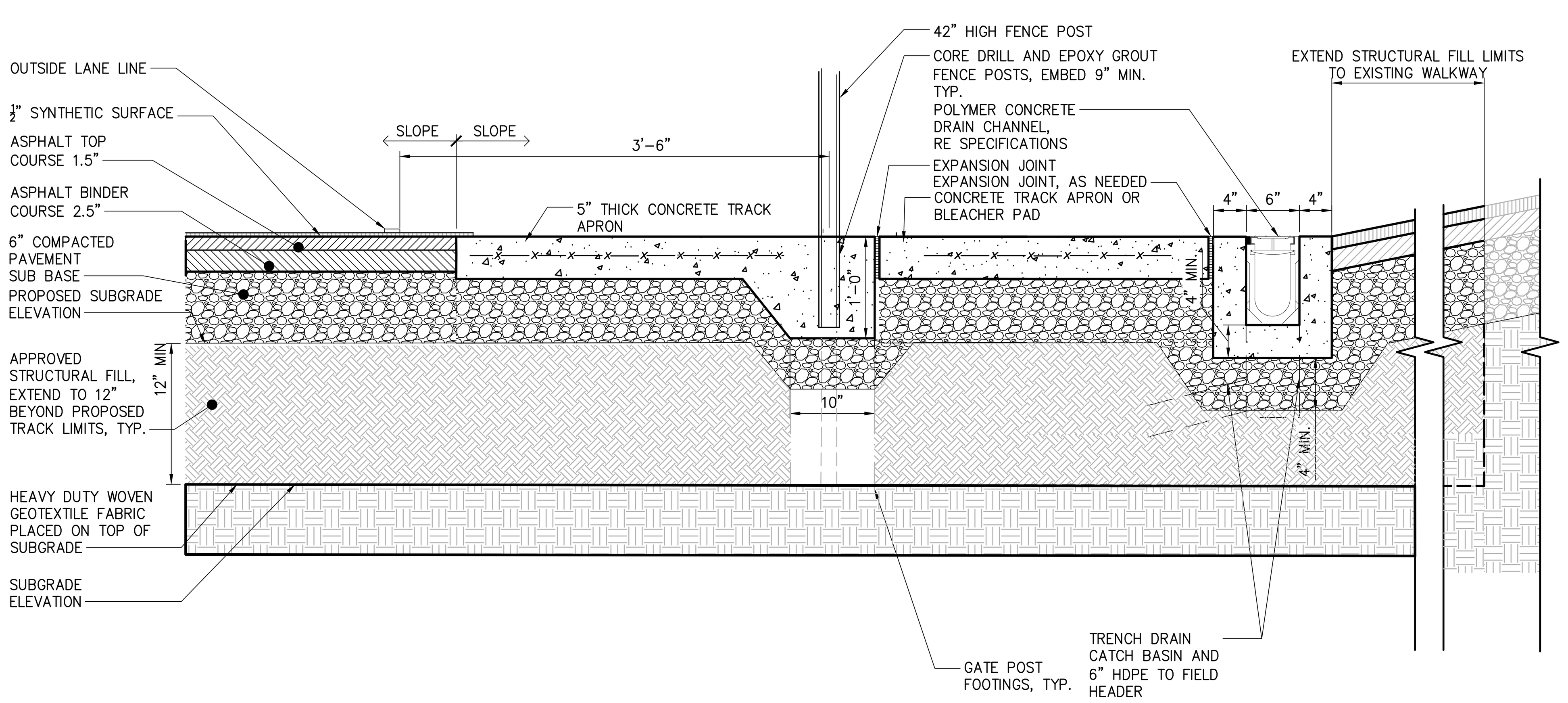

5 TRACK PERIMETER CROSS SECTION AT FENCE AND TRENCH DRAIN
SCALE:

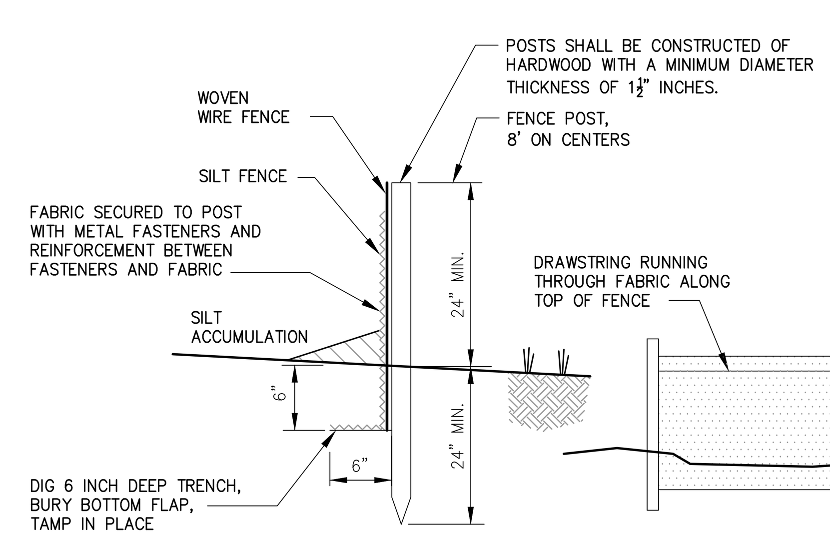

NOTES:
1. SEDIMENT SHALL BE REMOVED FROM THE UPSTREAM FACE OF THE FABRIC FENCE WHEN IT HAS REACHED A DEPTH OF ½ THE BARRIER HEIGHT.
2. REPAIR OR REPLACE THE FABRIC FENCE WHEN DAMAGED.
3. FABRIC FENCE SHALL BE INSPECTED DAILY FOR SIGNS OF DETERIORATION AND SEDIMENT REMOVAL.

6 SILT FENCE
SCALE:

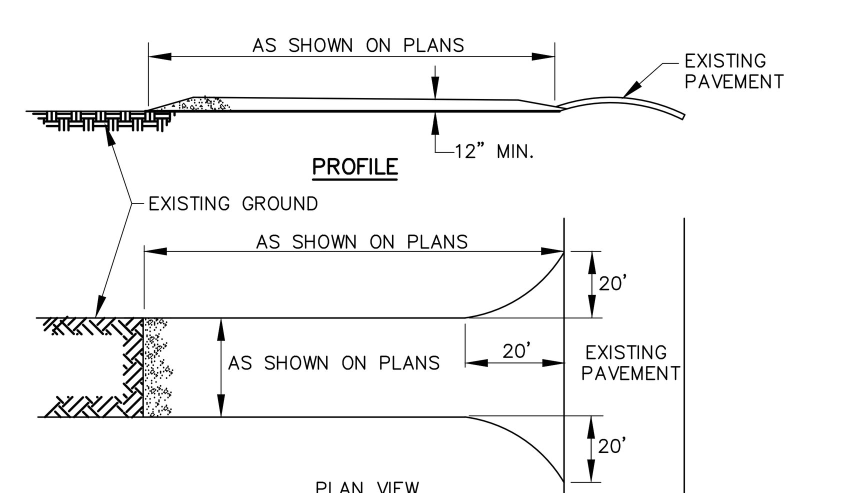

1. STONE SIZE–USE 2" STONE, OR RECLAIMED OR RECYCLED CONCRETE EQUIVALENT.
2. THICKNESS–NOT LESS THAN 12".
3. WOVEN GEOTEXTILE FABRIC WILL BE PLACED OVER THE ENTIRE AREA PRIOR TO PLACING OF STONE.
4. MAINTENANCE–THE ENTRANCE SHALL BE MAINTAINED IN A CONDITION WHICH WILL PREVENT TRACKING OR FLOWING OF SEDIMENT ONTO PUBLIC RIGHTS–OF–WAY. THIS MAY REQUIRE PERIODIC TOP DRESSING WITH ADDITIONAL STONE AS CONDITIONS DEMAND AND REPAIR AND/OR CLEANOUT OF ANY MEASURES USED TO TRAP SEDIMENT. ALL SEDIMENT SPILLED,DROPPED,WASHED, OR TRACKED ONTO PUBLIC RIGHTS–OF–WAY MUST BE REMOVED IMMEDIATELY.
5. PERIODIC INSPECTION AND NEEDED MAINTENANCE SHALL BE PROVIDED AFTER EACH RAIN.

7 STABILIZED CONSTRUCTION ENTRANCE DETAIL
SCALE:

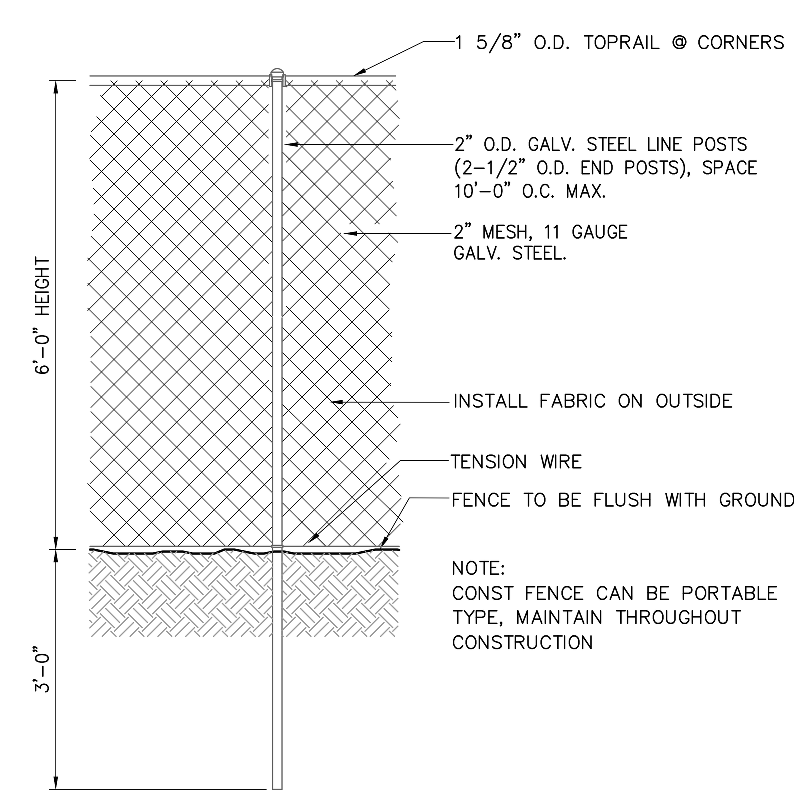

NOTE:
CONST FENCE CAN BE PORTABLE TYPE, MAINTAIN THROUGHOUT CONSTRUCTION

8 TEMPORARY CONSTRUCTION FENCE
SCALE:

Drawing Copyright © 2020

CHA
200 Corporate Place, Suite 110
Rocky Hill, CT 06067-1861
860.257.4557 . www.chacompanies.com

University of Hartford

IT IS A VIOLATION OF LAW FOR ANY PERSON, UNLESS THEY ARE ACTING UNDER THE DIRECTION OF A LICENSED PROFESSIONAL ENGINEER, ARCHITECT, LANDSCAPE ARCHITECT OR LAND SURVEYOR TO ALTER AN ITEM IN ANY WAY. IF AN ITEM BEARING THE STAMP OF A LICENSED PROFESSIONAL IS ALTERED, THE ALTERING ENGINEER, ARCHITECT, LANDSCAPE ARCHITECT OR LAND SURVEYOR SHALL STAMP THE DOCUMENT AND INCLUDE THE NOTATION "ALTERED BY" FOLLOWED BY THEIR SIGNATURE, THE DATE OF SUCH ALTERATION, AND A SPECIFIC DESCRIPTION OF THE ALTERATION.

UNIVERSITY OF HARTFORD
ATHLETIC SPORTS COMPLEX
200 BLOOMFIELD AVE, WEST HARTFORD, CT 06117

No.	Submittal / Revision	App'd.	By	Date

SITE DETAILS

Designed By:	Drawn By:	Checked By:
JP	JK	EO
Issue Date:	Project No:	Scale:
1/13/2023	59815	AS SHOWN

Drawing No.:
C-604

File: \\CHA-LLP.COM\PROJ\PROJECTS\ANY\K6\059815.000\09_DESIGN\DRAWINGS\01_SHEETS\C-600 SITE DETAILS.DWG
Saved: 1/12/2023 11:10:52 AM Plotted: 1/12/2023 1:42:30 PM Current User: Kinney, James LastSavedBy: 6052

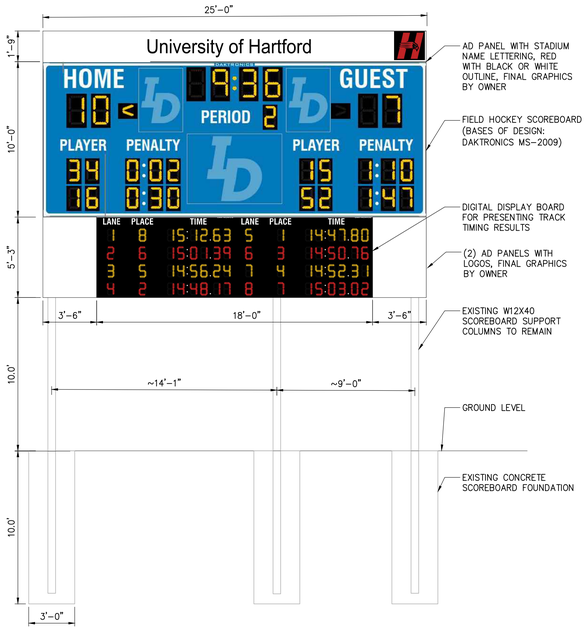

1 TRACK SCOREBOARD
SCALE: NOT TO SCALE

NOTES:
1. ALL DRAWINGS DEPICTING IN-GROUND EQUIPMENT ARE FOR INFORMATION ONLY. REFER TO VENDOR DRAWINGS FOR INSTALLATION DIMENSIONS AND INSTRUCTIONS.
2. CONCRETE TEXTURE IS A LIGHT BROOM FINISH, OWNER'S REPRESENTATIVE TO BE PRESENT UPON CONCRETE INSTALLATION TO VERIFY PROPER TEXTURE

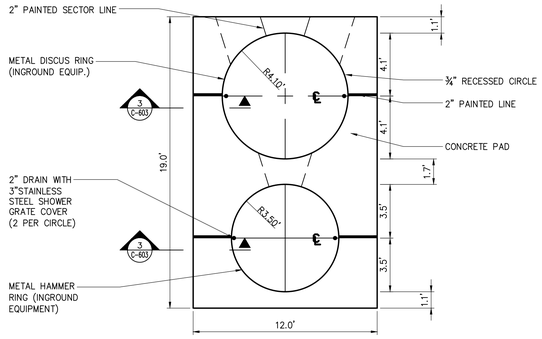

2 HAMMER/DISCUS TWO CIRCLE – PLAN
SCALE:

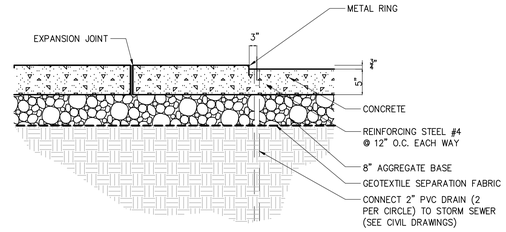

3 HAMMER/DISCUS CIRCLE – SECTION
SCALE:

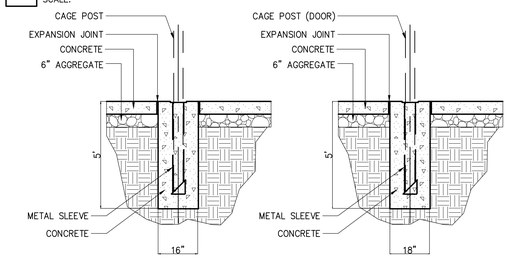

4 HAMMER/DISCUS NETTING
SCALE:

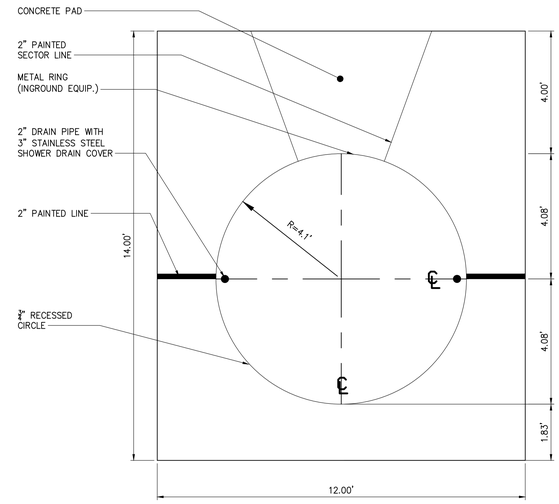

5 DISCUS ONE CIRCLE – PLAN
SCALE:

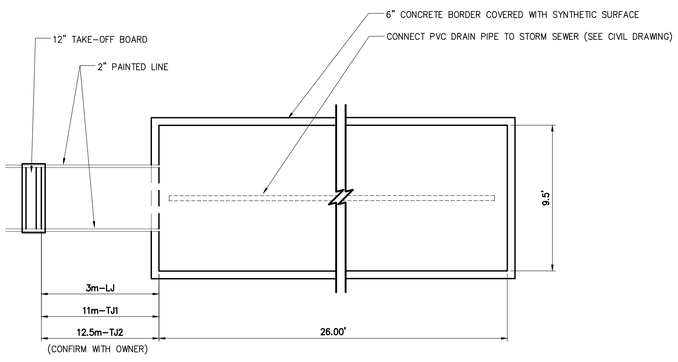

6 LONG/TRIPLE JUMP SAND PIT PLAN
SCALE:

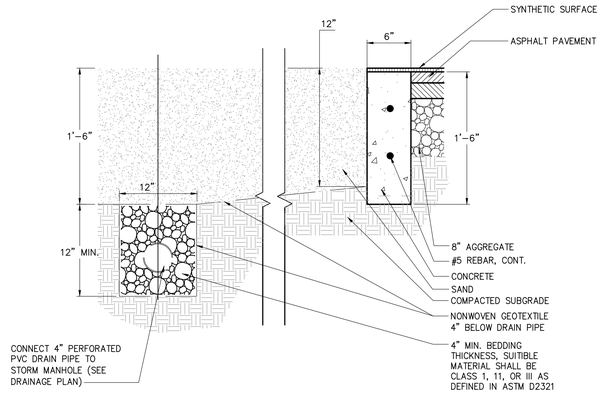

7 SAND PIT SECTION
SCALE:

NOTES:
1. ALL DRAWINGS DEPICTING IN-GROUND EQUIPMENTS ARE FOR BIDDING ONLY. REFER TO SHOP DRAWINGS FOR INSTALLATION DIMENSIONS AND INSTRUCTIONS
2. METAL TRAY TO RECEIVE REMOVABLE SYNTHETIC SURFACE PLUG, WHEN TAKE-OFF BOARD SYSTEM IS REMOVED.

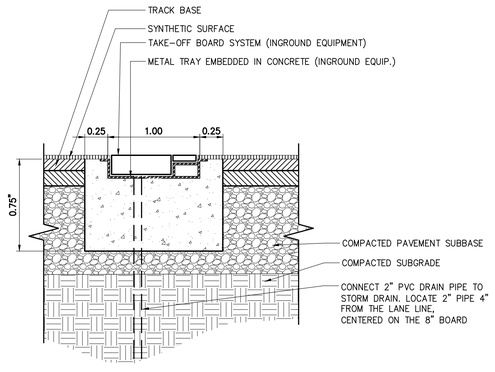

8 LONG/TRIPLE JUMP TAKE-OFF BOARD
SCALE:

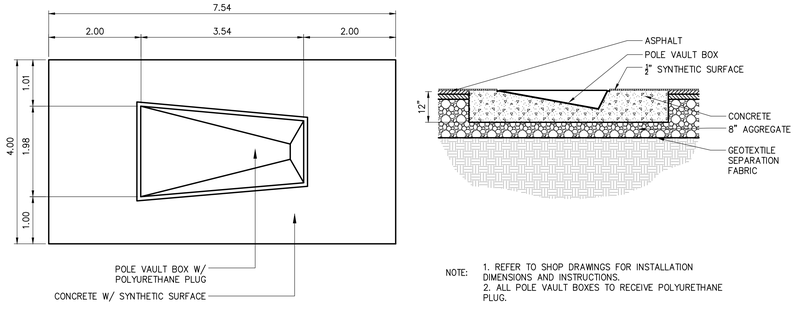

NOTE:
1. REFER TO SHOP DRAWINGS FOR INSTALLATION DIMENSIONS AND INSTRUCTIONS.
2. ALL POLE VAULT BOXES TO RECEIVE POLYURETHANE PLUG.

9 POLE VAULT BOX PLAN & SECTION
SCALE:

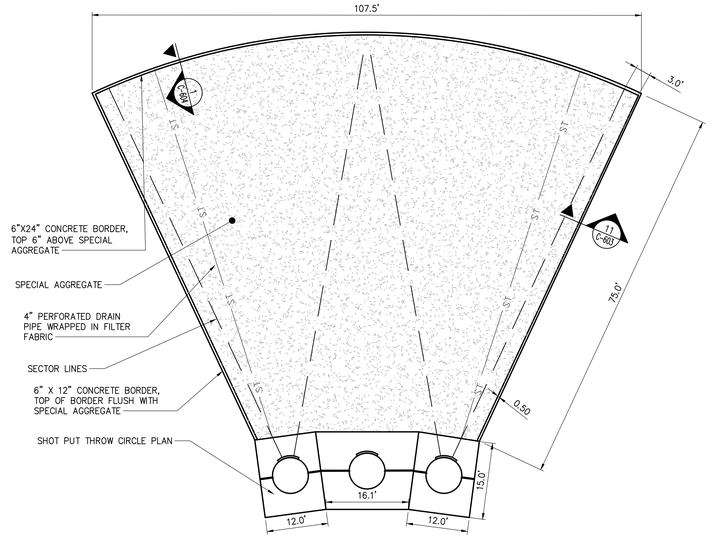

10 SHOT PUT PLAN
SCALE:

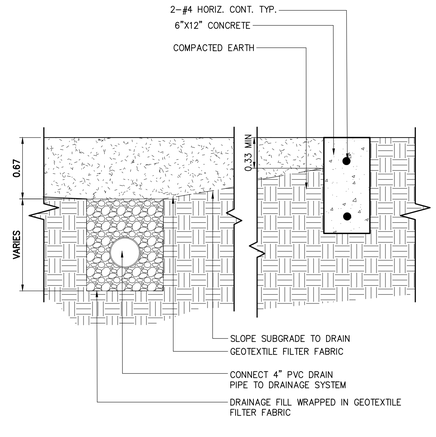

11 SHOT PUT LANDING AREA
SCALE:

Drawing Copyright © 2020

CHA
300 Corporate Place, Suite 110
Rocky Hill, CT 06067-1861
860.257.8557 : www.chacompanies.com

University of Hartford

IT IS A VIOLATION OF LAW FOR ANY PERSON, UNLESS THEY ARE ACTING UNDER THE DIRECTION OF A LICENSED PROFESSIONAL ENGINEER, ARCHITECT, LANDSCAPE ARCHITECT OR LAND SURVEYOR TO ALTER AN ITEM IN ANY WAY. IF AN ITEM BEARING THE STAMP OF A LICENSED PROFESSIONAL IS ALTERED, THE ALTERING ENGINEER, ARCHITECT, LANDSCAPE ARCHITECT OR LAND SURVEYOR SHALL STAMP THE DOCUMENT AND INCLUDE THE NOTATION "ALTERED BY" FOLLOWED BY THEIR SIGNATURE, THE DATE OF SUCH ALTERATION, AND A SPECIFIC DESCRIPTION OF THE ALTERATION.

UNIVERSITY OF HARTFORD
ATHLETIC SPORTS COMPLEX
200 BLOOMFIELD AVE, WEST
HARTFORD, CT 06117

No.	Submittal / Revision	App'd.	By	Date

SITE DETAILS

Designed By:	Drawn By:	Checked By:
JP	JK	EO
Issue Date:	Project No:	Scale:
1/13/2023	59815	AS SHOWN

Drawing No.:
C-605

File: \\CHA-LLP.COM\PROJ\PROJECTS\ANY\K6\059815.000\09_DESIGN\DRAWINGS\01_SHEETS\C-600 SITE DETAILS.DWG
Saved: 1/11/2023 8:46:23 AM Plotted: 1/12/2023 10:27:02 AM Current User: Kinney, James Last Saved By: 8052

NOTE: ALL DRAWINGS DEPICTING IN-GROUND EQUIPMENTS ARE FOR BIDDING ONLY. REFER TO SHOP DRAWINGS FOR INSTALLATION DIMENSIONS AND INSTRUCTIONS.

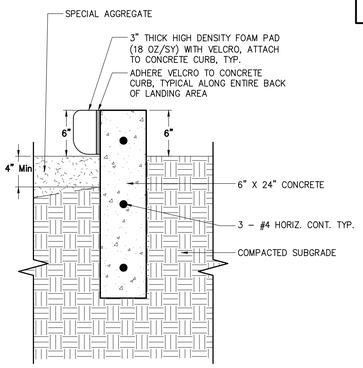

1 CONCRETE END SECTION
SCALE:

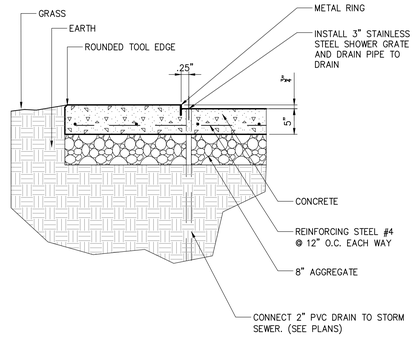

2 SHOT PUT CIRCLE SECTION
SCALE:

NOTE:
1. ALL DRAWINGS DEPICTING IN-GROUND EQUIPMENT ARE FOR INFORMATION ONLY. REFER TO MANUFACTURER SHOP DRAWINGS FOR INSTALLATION DIMENSIONS AND INSTRUCTIONS.
2. CONCRETE TEXTURE IS A LIGHT BROOM FINISH. OWNER'S REPRESENTATIVE TO BE PRESENT UPON CONCRETE INSTALLATION TO VERIFY PROPER TEXTURE.

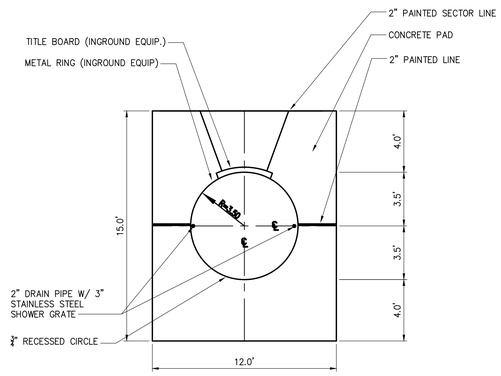

3 SHOT PUT CIRCLE PLAN
SCALE:

NOTE:
1. PROVIDE LOCATION PINS IN OUTSIDE CONCRETE CURBS AT 4 POINTS OF CURVATURE (PC'S) AND APEX OF BOTH TURNS (SEE PLAN VIEW BELOW)

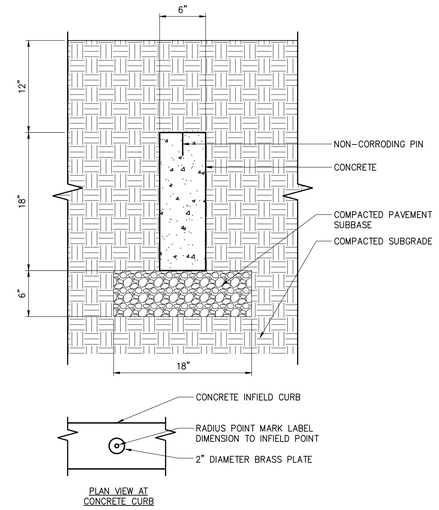

4 RADIUS MONUMENT POINT
SCALE:

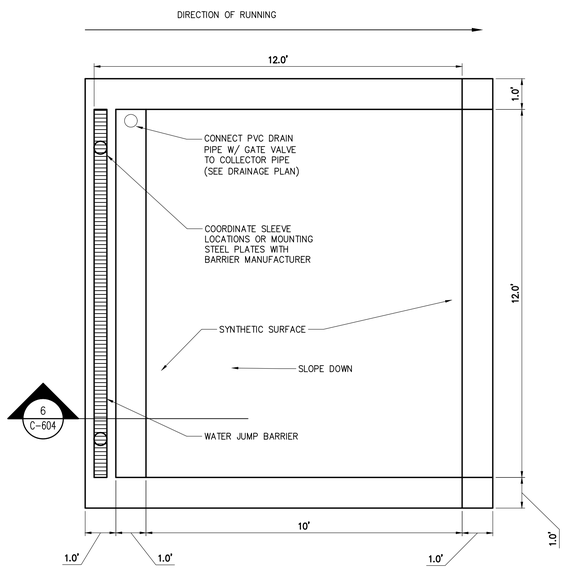

5 STEEPLECHASE WATER JUMP
SCALE:

NOTES:
1. ALL DRAWINGS DEPICTING IN-GROUND EQUIPMENTS ARE FOR BIDDING ONLY. REFER TO SHOP DRAWINGS FOR INSTALLATION DIMENSIONS AND INSTRUCTIONS.

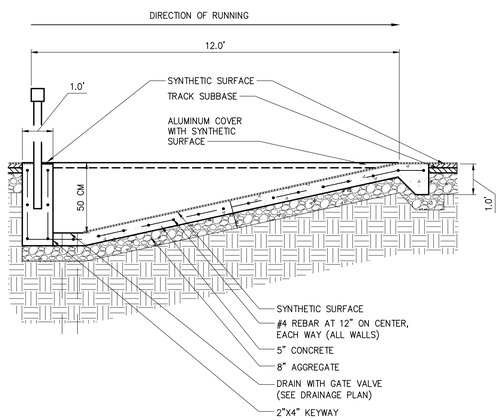

6 STEEPLECHASE WATER JUMP
SCALE:

NOTES:
1. ALL DRAWINGS DEPICTING IN-GROUND EQUIPMENT ARE FOR INFORMATION ONLY. REFER TO VENDOR DRAWINGS FOR INSTALLATION DIMENSIONS AND INSTRUCTIONS.
2. CONCRETE PAD TO EXTEND 1' PAST CAGE DOOR WHEELS OR WHEEL STOP PIN, WHICHEVER IS GREATER, CONCRETE PAD LIMITS SHALL BE ADJUSTED BASED ON FINAL APPROVED HAMMER/DISCUS CAGE PRODUCT
3. DRILL HOLES FOR CAGE DOOR STOP PINS AFTER LINE MARKINGS HAVE BEEN PAINTED AT THE FOLLOWING LOCATIONS (NCAA RULE 1 – SECTION 9 – ARTICLE 1):
   3.1. DOOR TOTALLY CLOSED
   3.2. DOOR PARALLEL TO SECTOR LINE
   3.3. DOOR PERPENDICULAR TO SECTOR LINE, BUT NOT EXTENDING MORE THAN 1.5M (4.92') INTO THE SECTOR
   3.4. TO PROVIDE AN 8M OPENING CENTERED ON THE THROW CIRCLES WITH BOTH DOORS OPEN.

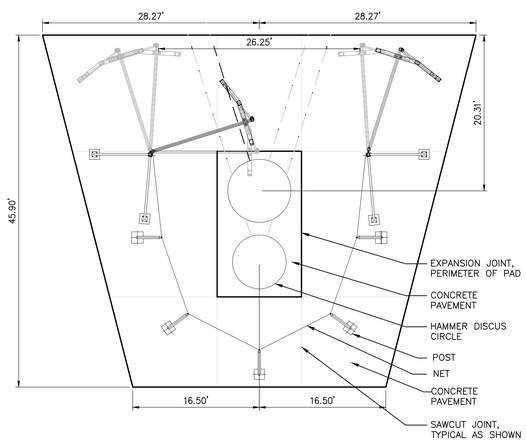

7 HAMMER/DISCUS CAGE PLAN
SCALE:

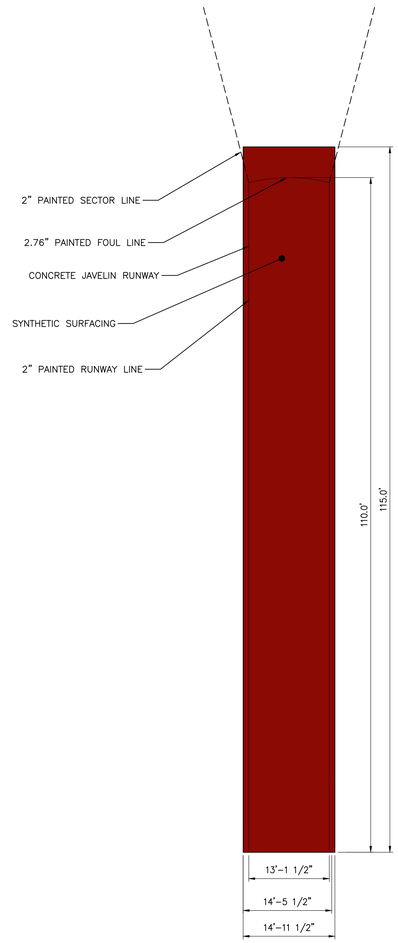

11 JAVELIN RUNWAY
SCALE:

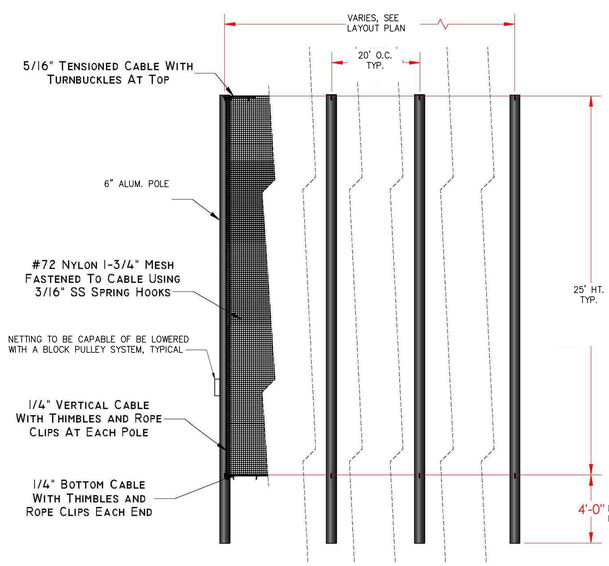

8 PROTECTIVE NETTING DETAIL – PLAN
SCALE: N.T.S.

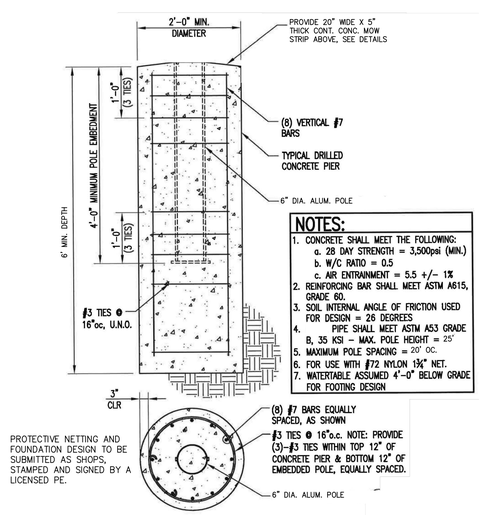

NOTES:
1. CONCRETE SHALL MEET THE FOLLOWING:
   a. 28 DAY STRENGTH = 3,500psi (MIN.)
   b. W/C RATIO = 0.5
   c. AIR ENTRAINMENT = 5.5 +/- 1%
2. REINFORCING BAR SHALL MEET ASTM A615, GRADE 60.
3. SOIL INTERNAL ANGLE OF FRICTION USED FOR DESIGN = 26 DEGREES
4. PIPE SHALL MEET ASTM A53 GRADE B, 35 KSI – MAX. POLE HEIGHT = 25'
5. MAXIMUM POLE SPACING = 20' OC.
6. FOR USE WITH #72 NYLON 1¾" NET.
7. WATERTABLE ASSUMED 4'-0" BELOW GRADE FOR FOOTING DESIGN

9 PROTECTIVE NETTING FOUNDATION DETAIL
SCALE: N.T.S.

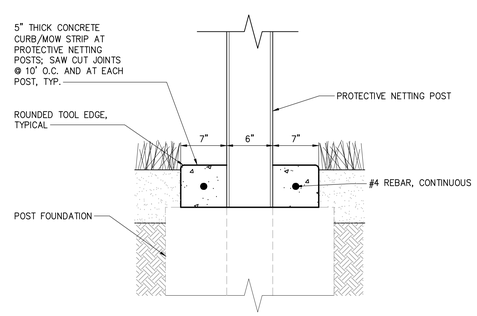

10 PROTECTIVE NETTING POST: STANDALONE SECTION
SCALE: N.T.S.

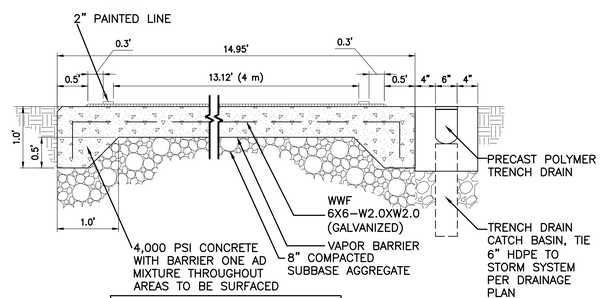

NOTES:
1. CONTROL JOINTS 15' OC.
2. TAPE CONTROL JOINTS PRIOR TO SYNTHETIC SURFACE INSTALLATION.

12 JAVELIN RUNWAY SECTION
SCALE:

Drawing Copyright © 2020

CHA
390 Corporate Place, Suite 110
Rocky Hill, CT 06067-1861
860.257.4557 . www.chacompanies.com

University of Hartford

IT IS A VIOLATION OF LAW FOR ANY PERSON, UNLESS THEY ARE ACTING UNDER THE DIRECTION OF A LICENSED PROFESSIONAL ENGINEER, ARCHITECT, LANDSCAPE ARCHITECT OR LAND SURVEYOR TO ALTER AN ITEM IN ANY WAY. IF AN ITEM BEARING THE STAMP OF A LICENSED PROFESSIONAL IS ALTERED, THE ALTERING ENGINEER, ARCHITECT, LANDSCAPE ARCHITECT OR LAND SURVEYOR SHALL STAMP THE DOCUMENT AND INCLUDE THE NOTATION "ALTERED BY" FOLLOWED BY THEIR SIGNATURE, THE DATE OF SUCH ALTERATION, AND A SPECIFIC DESCRIPTION OF THE ALTERATION.

UNIVERSITY OF HARTFORD
ATHLETIC SPORTS COMPLEX
200 BLOOMFIELD AVE, WEST
HARTFORD, CT 06117

No.	Submittal / Revision	App'd.	By	Date

SITE DETAILS

Designed By:	Drawn By:	Checked By:
JP	JK	EO
Issue Date:	Project No:	Scale:
1/13/2023	59815	AS SHOWN

Drawing No.:
C-606

File: \\CHA-LLP.COM\PROJ\PROJECTS\ANY\K6\059815.000\06_DESIGN\DRAWINGS\01-SHEETS\C-600 SITE DETAILS.DWG
Saved: 1/11/2023 8:48:23 AM Plotted: 1/12/2023 10:27:25 AM Current User: Kinney, James Last Saved By: 8052

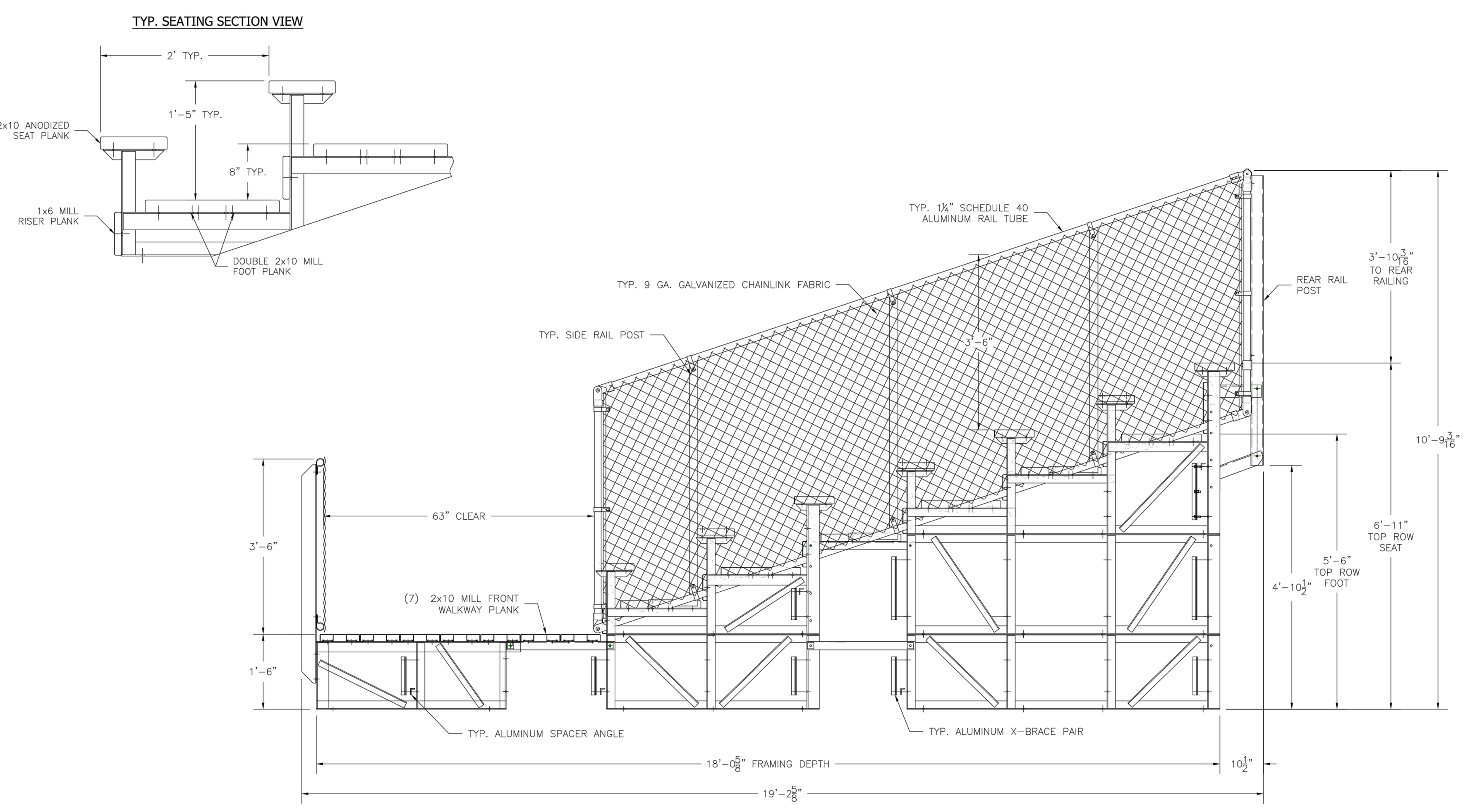

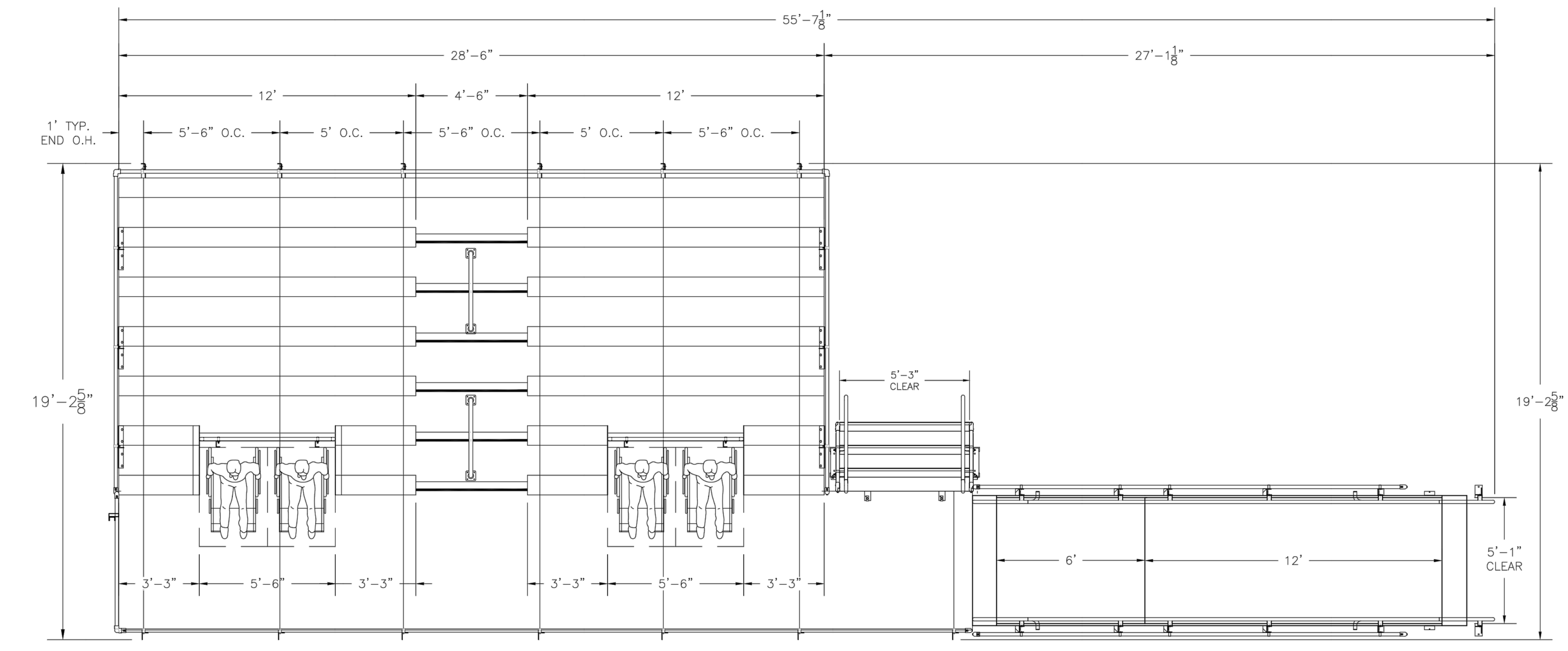

SECTION LENGTH	GROSS SEATS	ACTUAL SEATS	NO. OF ROWS	NET SEATS
28.5	19.00	19.00	1	19
12	8.00	8.00	4	32
3.25	2.17	2.00	2	4
3.25	2.17	2.00	2	4
12	8.00	8.00	4	32
3.25	2.17	2.00	2	4
3.25	2.17	2.00	2	4
			NET SEATS	**99**
			WHEELCHAIR SPACES	**4**
			TOTAL NET SEATING CAPACITY (BASED ON 18" PER SEAT)	**103**

1 18" ELEVATED BLEACHERS – SEATING PLAN AND SECTION
SCALE:

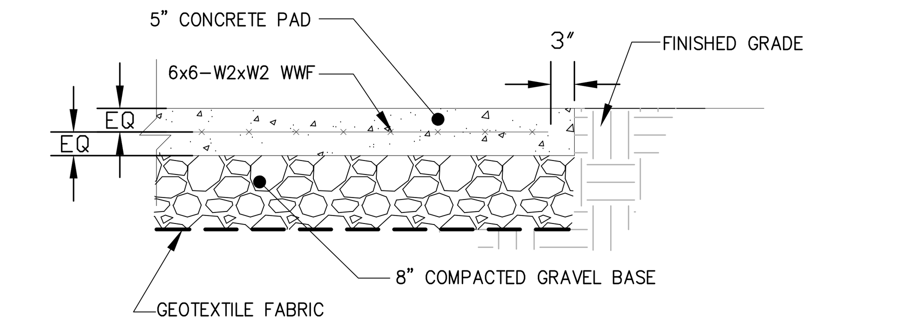

2 CONCRETE BLEACHER PAD (ADD ALTERNATE ITEM)
SCALE: NTS

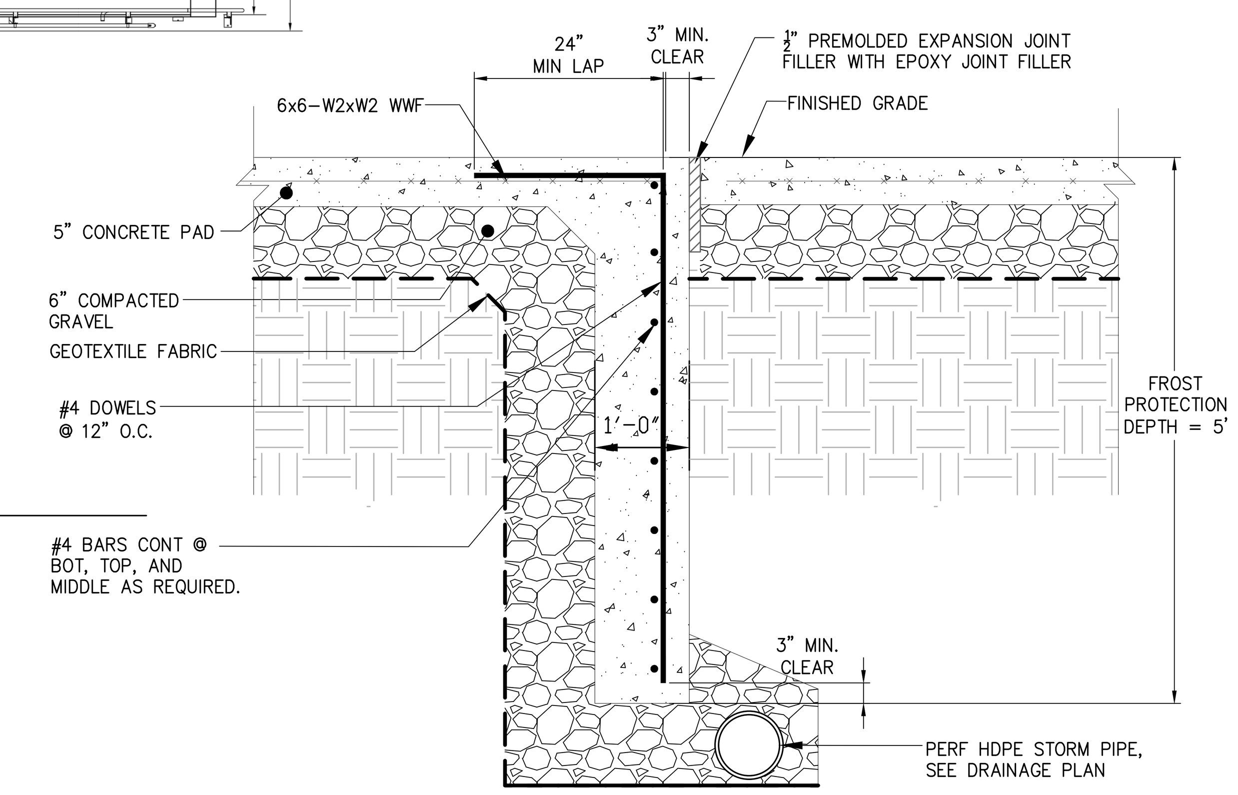

4 SECTION OF SLAB @ PRESS-BOX & TURN-DOWN (ADD ALTERNATE ITEM)
SCALE: NTS

NOTE:

THE LAYOUT SHOWN INDICATES OVERALL MINIMUM DIMENSIONS OF CONCRETE REQUIRED TO SUPPORT PRODUCT PROVIDED. EXPANSION AND CONTROL JOINTS SHOULD BE LOCATED SUCH THAT THEY DO NOT ALIGN DIRECTLY BELOW FRAME LOCATIONS. CONTRACTOR SHALL PROVIDE A JOINT LAYOUT FOR REVIEW AND APPROVAL.

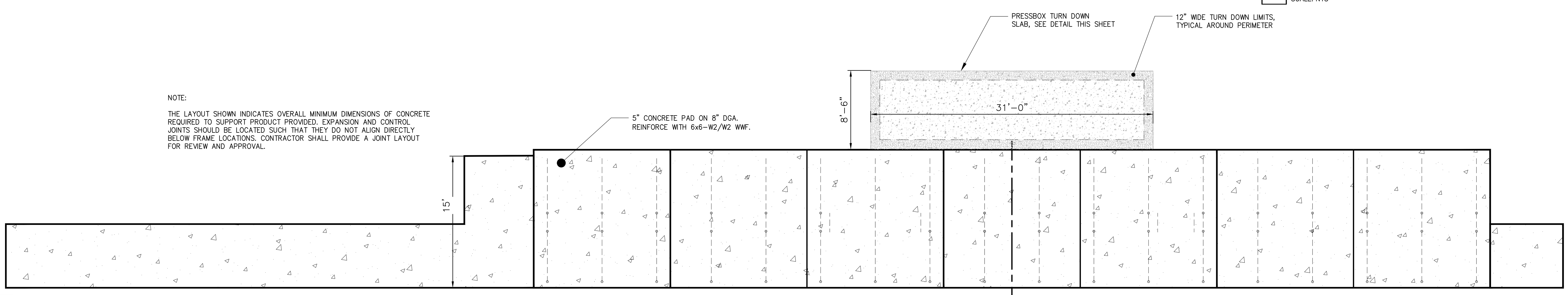

4 40" ELEVATED BLEACHER FOUNDATION LAYOUT (ADD ALTERNATE ITEM)
SCALE: NTS

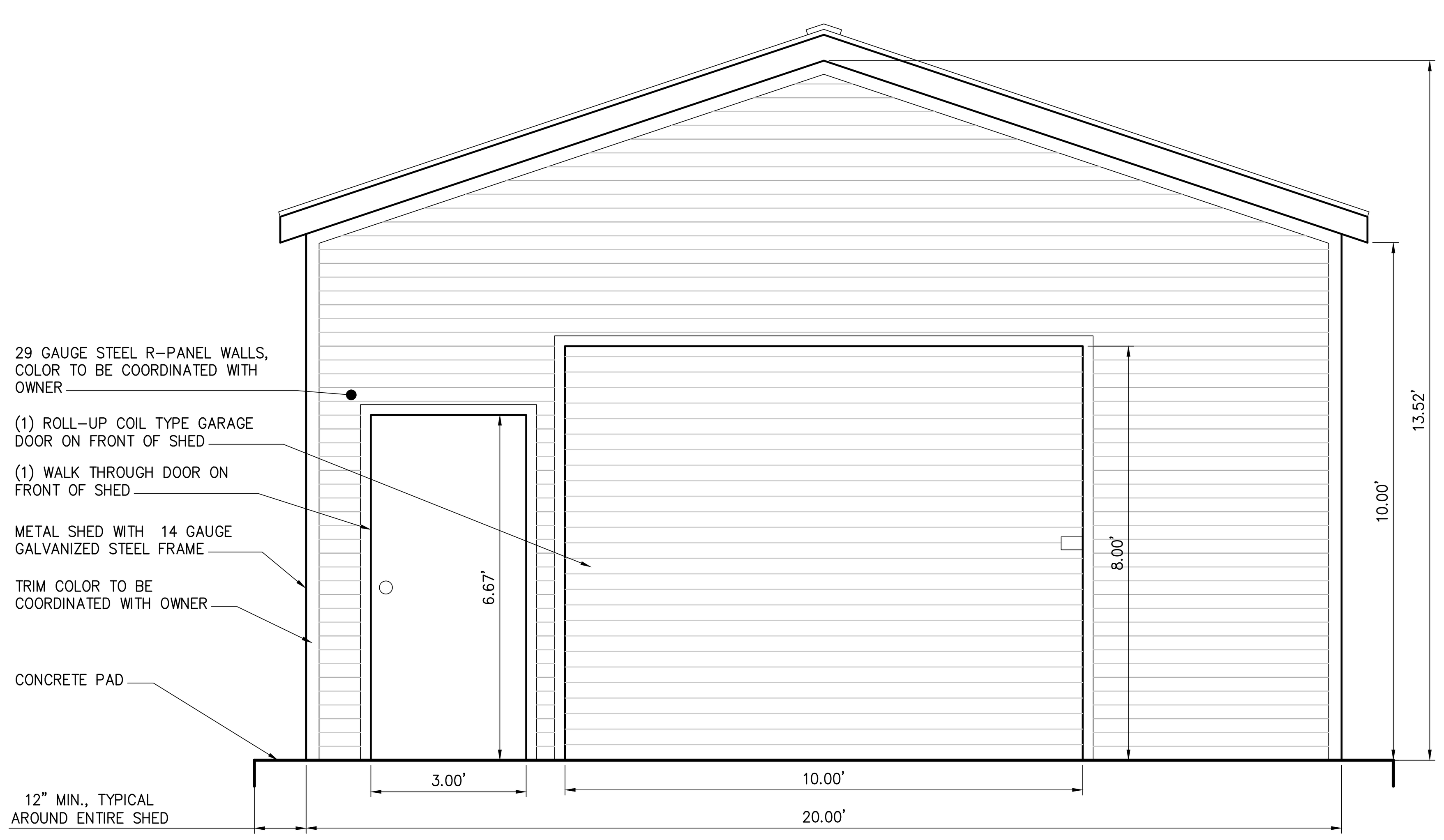

FRONT VIEW

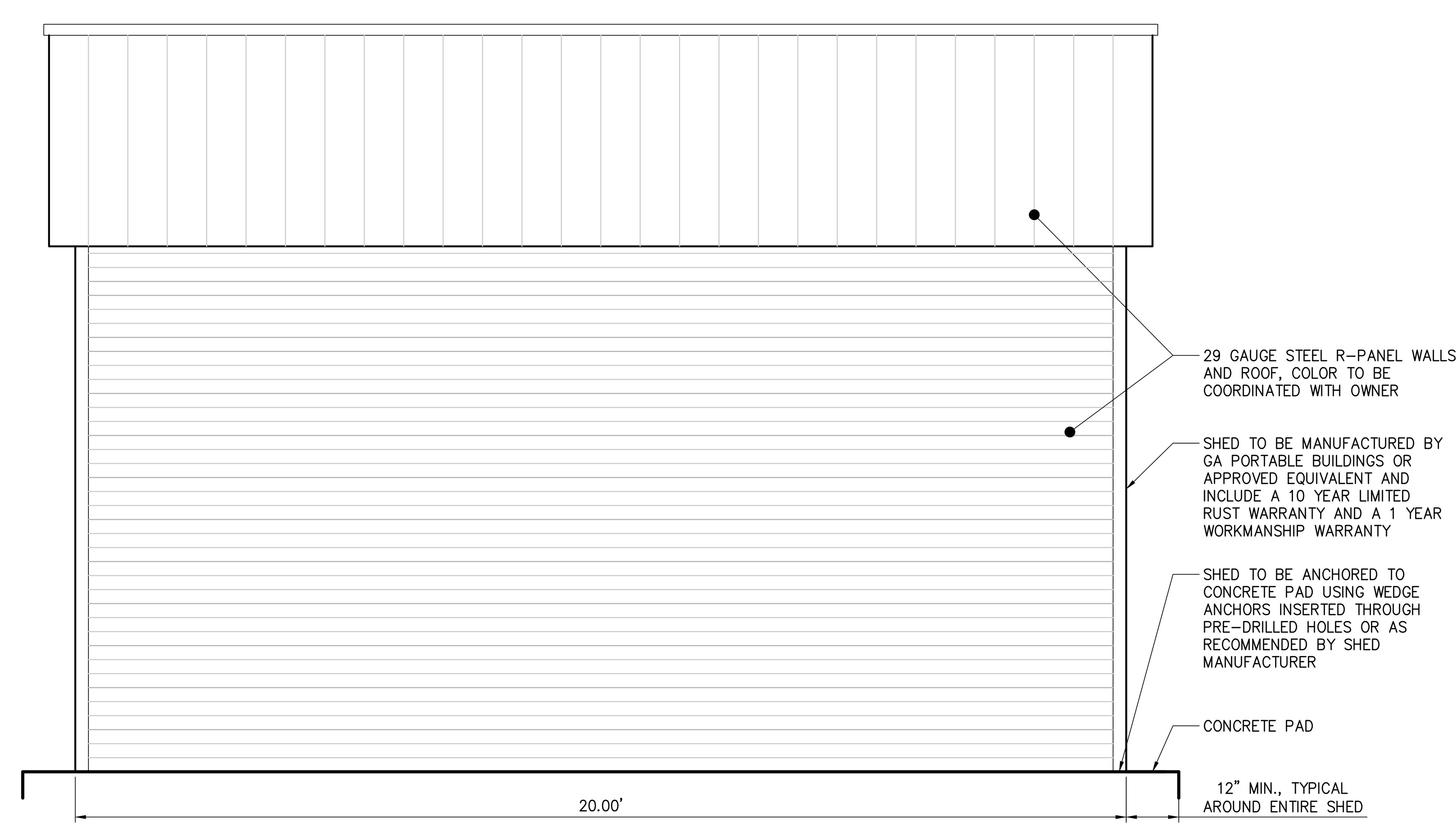

SIDE VIEW

5 METAL SHED DETAIL
SCALE:

Drawing Copyright © 2020

CHA
200 Corporate Place, Suite 110
Rocky Hill, CT 06067-1861
860.257.4557 · www.chacompanies.com

University of Hartford

IT IS A VIOLATION OF LAW FOR ANY PERSON, UNLESS THEY ARE ACTING UNDER THE DIRECTION OF A LICENSED PROFESSIONAL ENGINEER, ARCHITECT, LANDSCAPE ARCHITECT OR LAND SURVEYOR TO ALTER AN ITEM IN ANY WAY. IF AN ITEM BEARING THE STAMP OF A LICENSED PROFESSIONAL IS ALTERED, THE ALTERING ENGINEER, ARCHITECT, LANDSCAPE ARCHITECT OR LAND SURVEYOR SHALL STAMP THE DOCUMENT AND INCLUDE THE NOTATION "ALTERED BY" FOLLOWED BY THEIR SIGNATURE, THE DATE OF SUCH ALTERATION, AND A SPECIFIC DESCRIPTION OF THE ALTERATION.

UNIVERSITY OF HARTFORD
ATHLETIC SPORTS COMPLEX
200 BLOOMFIELD AVE, WEST HARTFORD, CT 06117

No.	Submittal / Revision	App'd.	By	Date

BLEACHER DETAILS

Designed By:	Drawn By:	Checked By:
JP	JK	EO
Issue Date:	Project No:	Scale:
1/13/2023	59815	AS SHOWN

Drawing No.:
C-607

Material Symbols

- EARTH
- GRANULAR FILL
- SAND, GROUT AS NOTED
- CAST-IN-PLACE CONCRETE
- PRECAST CONCRETE, CAST STONE
- CONCRETE MASONRY UNIT
- BRICK MASONRY
- STONE: LIMESTONE, GRANITE, MARBLE OR AS NOTED
- TERRA COTTA, STRUCTURAL CLAY TILE
- METAL: TYPE AS NOTED
- METAL: ROLLED SHAPES
- WOOD FRAMING / BLOCKING: CONTINOUS
- WOOD SHIM
- FINISHED WOOD SHOWN CUT AND ELEVATION
- ENGINEERED WOOD: GLUE LAMINATED
- WOOD FLOOR, WOOD SHINGLES, OR SIDING
- PARTICLEBOARD
- PLYWOOD
- GLASS FIBER REINFORCED CONCRETE SIDING OR TRIM
- EIFS
- SPRAYED FIREPROOFING SHOWN ON ROLLED SHAPE
- BATT INSULATION: THERMAL OR ACOUSTICAL, UNO
- RIGID INSULATION: THERMAL, ACOUSTICAL, OR SAFING
- GYPSUM WALL BOARD
- PLASTER ON METAL LATH
- SHEATHING: GYPSUM, OR AS NOTED
- ACOUSTICAL CEILING TILE
- RESINOUS FLOORING: TERRAZO, TROWEL-ON, UNO
- TILE: CERAMIC, QUARRY, UNO
- CARPET, CARPET TILE (DETAIL)
- GRATING SHOWN IN PLAN
- GRATING
- INSULATED GLASS: (SMALL SCALE)
- INSULATED GLASS: (DETAIL)
- MEMBRANE: WATERPROOF, ROOF, DAMPPROOFING
- AIR BARRIER SYSTEM

NOTE: PATTERNS SHOWN REPRESENT CUT MATERIALS IN PLAN OR SECTION, UNLESS NOTED OTHERWISE ABOVE.

Drawing Symbols

WALL SECTION MARKER
SECTION IDENTIFICATION
DRAWING NUMBER

BUILDING SECTION MARKER
SECTION IDENTIFICATION
DRAWING NUMBER

DETAIL MARKER
DETAIL IDENTIFICATION
DRAWING NUMBER

INTERIOR ELEVATION MARKER
ELEVATION IDENTIFICATION
ELEVATION DRAWING IDENTIFICATION

ROOM IDENTIFICATION
ROOM NAME
ROOM NUMBER
ANY ADD. INFO

PLAN NOTE
PLAN NOTE NUMBER

WALL TYPE
WALL TYPE NUMBER

DOOR IDENTIFICATION
DOOR NUMBER

WINDOW IDENTIFICATION
WINDOW MARK

RATED PARTITION:
SEE LIFE SAFETY PLAN
FOR RATING

Abbreviations

A/C	AIR CONDITIONING
A/E	ARCHITECT/ENGINEER
A/V	AUDIO/VISUAL
ACOUS	ACOUSTICAL
ACT	ACOUSTICAL CEILING TILE
ADJ	ADJUSTABLE
AFF	ABOVE FINISHED FLOOR
ALT	ALTERNATE
ALUM	ALUMINUM
AP	ACCESS PANEL
B/O	BOTTOM OF
BD	BOARD
BLDG	BUILDING
BLK'G	BLOCKING
BOW	BOTTOM OF WALL
BSMT	BASEMENT
CAB	CABINET
CFCI	CONTRACTOR FURNISHED CONTRACTOR INSTALLED
CG	CORNER GUARD
CIP	CAST-IN-PLACE
CJ	CONTROL JOINT
CL	CENTERLINE
CLG	CEILING
CLR	CLEAR(ANCE)
CMP	COMPOSITE METAL PANEL
CMU	CONCRETE MASONRY UNIT
COL	COLUMN
CONC	CONCRETE
CONT	CONTINUOUS
CONTR	CONTRACTOR
COOR	COORDINATE
CPT	CARPET
CT	CERAMIC TILE
C/W	COLD WATER
DAFS	DIRECT APPLIED FINISH SYSTEM
DEFS	DIRECT EXTERIOR FINISH SYSTEM
DEPT	DEPARTMENT
DET	DETAIL
DF	DRINKING FOUNTAIN
DIA	DIAMETER
DIM	DIMENSION
DN	DOWN
DS	DOWNSPOUT
DWG	DRAWING
EA	EACH
EC	ELECTRICAL CONTRACTOR
EIFS	EXTERIOR INSULATION FINISH SYSTEM
EJ	EXPANSION JOINT
EL	ELEVATION
ELEC	ELECTRIC/ELECTRICAL
ELEV	ELEVATOR/ELEVATION
EP	ELECTRICAL PANEL
EPT	EPOXY PAINT
EQ	EQUAL
EQUIP	EQUIPMENT
EXIST'G	EXISTING
EXP	EXPOSED
EXT	EXTERIOR
F/R	FIRE RESISTIVE
FB	FACE BRICK
FD	FLOOR DRAIN
FE	FIRE EXTINGUISHER
FEC	FIRE EXTINGUISHER CABINET
FF&E	FURNISHINGS, FIXTURES AND EQUIPMENT
FFE	FINISH FLOOR ELEVATION
FHC	FIRE HOSE CABINET
FIN	FINISH(ED)
FLR	FLOOR
FO	FINISH OPENING
FOB	FACE OF BLOCK
FOBR	FACE OF BRICK
FOC	FACE OF CONCRETE
FOF	FACE OF FINISH
FOF	FACE OF GYPSUM BD.
FOS	FACE OF STUD
FPRF	FIREPROOF
FT	FOOT/FEET
FV	FIELD VERIFY
GA	GAUGE
GC	GENERAL CONTRACTOR
GL	GLASS
GWB	GYPSUM WALL BOARD
HB	HOSE BIBB
HDWR	HARDWARE
HM	HOLLOW METAL
HORIZ	HORIZONTAL
HPF	HIGH PERFORMANCE FLOORING
HT	HEIGHT
HVAC	HEATING, VENTILATION & A/C
HW	HOT WATER
ID	INSIDE DIAMETER
INFO	INFORMATION
INSUL	INSULATION
INT	INTERIOR
JC	JANITOR CLOSET
JST	JOIST BEARING
BRG	
JT	JOINT
L	LENGTH
LAV	LAVATORY
LVT	LUXURY VINYL TILE
MAX	MAXIMUM
MC	MECHANICAL CONTRACTOR
MDF	MEDIUM DENSITY FIBERBOARD
MECH	MECHANICAL
MEP	MECH./ELECT./PLUMBING
MFR	MANUFACTURER(ING)
MH	MANHOLE
MIN	MINIMUM
MISC	MISCELLANEOUS
MO	MASONRY OPENING
MR	MOISTURE RESISTANT
MTL	METAL
NIC	NOT IN CONTRACT
NO	NUMBER
NTS	NOT TO SCALE
OA	OVERALL
OC	ON CENTER
OD	OUTSIDE DIAMETER
OFCI	OWNER FURNISHED CONTRACTOR INSTALLED
OFOI	OWNER FURNISHED OWNER INSTALLED
OPG	OPENING
OPP	OPPOSITE
P/T	PRESSURE TREATED
PL	PROPERTY LINE
PLAM	PLASTIC LAMINATE
PLYWD	PLYWOOD
PR	PAIR
PREFAB	PREFABRICATED
PT	PAINTED
PT BD	PARTICLE BOARD
QT	QUARRY TILE
R	RADIUS
RCP	REFLECTED CEILING PLAN
RD	ROOF DRAIN
REF	REFERENCE
REFL	REFLECTED
REINF	REINFORCED
RESIL	RESILIENT
RM	ROOM
RO	ROUGH OPENING
RWL	RAIN WATER LEADER
SAFB	SOUND ATTENUATING FIBERGLASS BATT
SC	SEALED CONCRETE
SCHED	SCHEDULE
SD	SOAP DISPENSER
SECT	SECTION
SF	SQUARE FEET
SHT	SHEET
SIM	SIMILAR
SPEC	SPECIFICATION
SQ	SQUARE
SS	STAINLESS STEEL
STD	STANDARD
STL	STEEL
STOR	STORAGE
STRUCT	STRUCTURAL
SUSP	SUSPENDED)
T&G	TONGUE AND GROOVE
T/O	TOP OF
TB	TOWEL BAR
TBD	TO BE DETERMINED
TECH	TECHNICAL
TEMP	TEMPORARY
THK	THICKNESS
TOC	TOP OF CURB
TOD	TOP OF DECK
TOM	TOP OF MASONRY
TOP	TOP OF PLATE
TOS	TOP OF STEEL
TOW	TOP OF WALL
TYP	TYPICAL
UNO	UNLESS NOTED OTHERWISE
UTIL	UTILITY
VCT	VINYL COMPOSITION TILE
VERT	VERTICAL
VEST	VESTIBULE
VIF	VERIFY IN FIELD
VTR	VENT THROUGH ROOF
W	WIDE/WIDTH
W/	WITH
W/O	WITHOUT
WC	WATER CLOSET
WD	WOOD
WP	WEATHER PROOF
WR	WATER RESISTANT
WT	WEIGHT
WW/F	WELDED WIRE FABRIC

Project Data

PROJECT DESCRIPTION

This project involves the design and construction of the new baseball and softball support building. The uses include batting cages, athletic function room, locker rooms, sports medicine, strength and conditioning, laundry and associated storage, electrical and mechanical spaces.

APPLICABLE CODES

BUILDING:	2022 CONNECTICUT STATE BUILDING CODE
ACCESSIBILITY:	ICC A117.1-2017
ENERGY CONSERVATION:	2021 INTERNATIONAL ENERGY CONVERSATION CODE
ELECTRICAL:	2020 NATIONAL ELECTRICAL CODE (NFPA 70)
MECHANICAL:	2021 INTERNATIONAL MECHANICAL CODE
PLUMBING:	2022 INTERNATIONAL PLUMBING CODE
OTHER:	ICC 300-17

BUILDING INFORMATION

USE AND OCCUPANCY GROUPS:

PRESS BOX:	BUSINESS, B*
SUPPORT BUILDING:	UTILITY, U/STORAGE, S-2
GRANDSTANDS:	ASSEMBLY, A-5

*PER 303.1.1 PRESS BOX CAN BE CLASSIFIED AS GROUP B OCCUPANCY WITH OCCUPANT LOAD UNDER 50.

OCCUPANCY LOAD FACTORS:

PRESSBOX:	15 NET
GRANDSTAND:	SEAT COUNT
STORAGE/MECHANICAL ROOMS:	300 GROS

NOTE: SEE LIFE SAFETY PLAN FOR ADDITIONAL OCCUPANCY INFORMATION.

CONSTRUCTION TYPES:

PRESS BOXES:	VB
SUPPORT BUILDING:	IIB
GRANDSTANDS:	IIB

BUILDING INFORMATION

BUILDING AREAS:

ALLOWABLE:

PRESS BOX:	500 SF MAX
SUPPORT BUILDING:	8,500 SF/STORY
GRANDSTAND:	UNLIMITED

ACTUAL:

PRESS BOX:	146 SF
SUPPORT BUILDING:	1,650 SF
GRANDSTAND:	1,782 SF

BUILDING HEIGHT:

ALLOWABLE:

PRESS BOX:	2 STORIES/40 FT
SUPPORT BUILDING:	2 STORIES/55 FT
GRANDSTAND:	UNLIMITED

ACTUAL:

PRESS BOX:	1 STORY/21 FT
SUPPORT BUILDING:	1 STORY/14 FT
GRANDSTAND:	10'-10"

Project Location

PROJECT LOCATION

General Notes

	General Notes
1.	IF DRAWING IS LESS THAN 30" BY 42". IT IS A REDUCED DRAWING. REDUCE NUMERICAL SCALE ACCORDINGLY.
2.	"A" DRAWINGS COVER ABBREVIATIONS, SYMBOLS AND GENERAL NOTES FOR THE ARCHITECTURAL DISCIPLINES ONLY. SEE DRAWINGS OF ALL OTHER DISCIPLINES FOR THEIR GENERAL NOTES, SYMBOLS, AND ABBREVIATIONS.
3.	REFER TO PROJECT SPECIFICATIONS FOR GENERAL CONTRACT REQUIREMENTS, MATERIALS, WORKMANSHIP AND SHOP DRAWINGS.
4.	UNLESS GRAPHICALLY INDICATED OR OTHERWISE NOTED "EXISTING", ALL MATERIALS ARE NEW.
5.	CONTRACTOR SHALL VERIFY ALL PROPOSED AND EXISTING DIMENSIONS AND ELEVATIONS IN THE FIELD. CONTRACTOR SHALL VERIFY ALL EXISTING CONDITIONS IN THE FIELD. NOTIFY THE ARCHITECT IMMEDIATELY AND BEFORE PROCEEDING WITH RELEVANT ASPECT OF THE WORK OF ANY LAYOUT CONDITION THAT IS NOT IN CONSISTENT WITH THE PLANS OR THAT WILL IMPAIR LAYOUTS OR ATTACHMENTS OF FINISHES.
6.	ALL DIMENSIONS SHALL BE FIELD COORDINATED BY THE CONTRACTOR. ALL OTHER DISCIPLINES DRAWINGS, AND ANY INCONSISTENCIES SHALL BE REPORTED TO THE ARCHITECT BEFORE PROCEEDING WITH THE WORK.
7.	WHERE DISCREPANCIES EXIST BETWEEN THE DRAWINGS OF THE VARIOUS TRADES, CONSULT THE ARCHITECT BEFORE PROCEEDING WITH WORK.
8.	COORDINATE PLACEMENT OF ALL CEILING ELEMENTS WITH MECHANICAL, ELECTRICAL, AND ALARM INSTALLERS. WHERE DISCREPANCIES EXIST BETWEEN THE DRAWINGS AND INSTALLATIONS,CONSULT THE ARCHITECT BEFORE PROCEEDING WITH WORK.
9.	CONTRACTOR SHALL COORDINATE SIZE AND LOCATION OF ALL SLAB AND WALL OPENINGS INCLUDING, BUT NOT LIMITED TO, OPENINGS IN ELECTRICAL CLOSETS, CONTROL ROOMS, BOILER AND MECHANICAL ROOMS, ELEVATOR MACHINE ROOM, SHAFTS, ETC., PER EQUIPMENT MANUFACTURER RECOMMENDATIONS.

	General Notes
10.	DO NOT SCALE DRAWINGS. USE INDICATED OR CALCULATED DIMENSIONS AND ELEVATIONS IN THE FIELD. NOTIFY THE ARCHITECT IMMEDIATELY AND BEFORE PROCEEDING WITH RELEVANT ASPECT OF THE WORK OF ANY LAYOUT CONDITIONS THAT IS NOT CONSISTENT WITH THE PLANS OR THAT WILL IMPAIR LAYOUT.
11.	DIMENSIONING FORMAT FOR THE ARCHITECTURAL DRAWINGS IS: A. DIMENSIONS FOR PRECAST ELEMENTS ARE TO THE FACE OF THE ELEMENT UNLESS OTHERWISE NOTED. B. DIMENSIONS FOR MASONRY ARE ACTUAL UNLESS OTHERWISE NOTED. C. DIMENSIONS FOR STUD WALLS ARE TO FACE OF STUD WALL UNLESS OTHERWISE NOTED. D. CRITICAL CLEAR DIMENSIONS, FINISH OPENING AND REQUIRED ROUGH OPENING, ARE INDICATED AND ARE TO FINISH FACE OF ELEMENT.
12.	BACK-KEYING REFERENCES ARE NOT INTENDED TO GIVE QUANTITY OF, AND ALL LOCATIONS, IN WHICH A PARTICULAR DETAIL OCCURS, BUT ARE TO AID CONTRACTOR IN FINDING SAMPLE LOCATION(S) IN WHICH A PARTICULAR DETAIL OCCURS.
13.	DETAILED DRAWINGS AND LARGER SCALE DRAWINGS TAKE PRECEDENCE OVER SMALL SCALE DRAWINGS.
14.	ALL INDICATIONS AND NOTATIONS ON THE DRAWING APPLYING TO ONE AREA OR CONDITION APPLY TO OTHER SIMILAR AREAS OR CONDIITIONS UNLESS OTHERWISE NOTED. DETAILS NOT SHOWN ARE SIMILAR IN CHARACTER TO DETAILS SHOWN. WHERE SPECIFIC DIMENSIONS, DETAILS OR DESIGN INTENT CANNOT BE DETERMINED, CONSULT THE ARCHITECT BEFORE PROCEEDING WITH WORK.

	General Notes
15.	ALL DRAWING AND CONSTRUCTION NOTES ARE COMPLIMENTARY AND WHAT IS CALLED FOR BY EITHER WILL BE BINDING AS IF CALLED FOR BY ALL. ANY WORK SHOWN OR REFERRED TO ONE DRAWING SHALL BE PROVIDED AS THOUGH SHOWN ON ALL RELATED DRAWINGS.
16.	REFER TO STRUCTURAL DRAWINGS FOR DIMENSIONS AND LAYOUT OF STRUCTURAL CONCRETE.
17.	REFER TO STRUCTURAL DRAWINGS FOR STRUCTURAL STEEL SIZES, ALL CONCRETE REINFORCEMENT, UNIT MASONRY REINFORCEMENT, STEEL LINTEL SIZES, RELIEVING ANGLE SIZES, CONCRETE FILLED LINTEL BLOCK AND ALL OTHER REQUIREMENETS FOR LOAD CARRYING MEMBERS. STRUCTURAL DRAWINGS SHALL GOVERN FOR LOAD CARRYING MEMBERS.
18.	REFER TO STRUCTURAL DRAWINGS FOR PENETRATIONS OF STRUCTURAL ELEMENTS. ALSO REFER TO PLUMBING, FIRE PROTECTION, MECHANICAL, FIRE ALARM, ELECTRICAL, AND TELEDATA DRAWINGS FOR SLEEVES, PENETRATIONS AND EMBEDMENTS REQUIRED FOR THESE SYSTEMS. THE CONTRACTOR SHALL COORDINATE ALL EMBEDMENTS AND PENETRATIONS.
19.	REFER TO LANDSCAPING, SIGNAGE, CIVIL, STRUCTURAL, PLUMBING, FIRE PROTECTION, MECHANICAL, FIRE ALARM, ELECTRICAL, TELEDATA AND APPROVED SHOP DRAWINGS FOR LOCATIONS AND DIMENSIONS OF CHASES, INSERTS, OPENINGS, SLEEVES, DEPRESSIONS AND ATTACHMENT REQUIREMENTS.
20.	REFER TO MECHANICAL, PLUMBING, FIRE PROTECTION AND ELECTRICAL DRAWINGS FOR EQUIPMENT THAT REQUIRES HOUSEKEEPING PADS. SEE STRUCTURAL DRAWINGS FOR TYPICAL HOUSEKEEPING PAD DETAILS AND REINFORCEMENT REQUIREMENTS.
21.	PROVIDE ACCESS PANELS REQUIRED BY APPLICABLE CODES AND REQUIRED FOR MECHANICAL AND ELECTRICAL EQUIPMENT, WHETHER OR NOT, SHOWN ON DRAWINGS. ALL ACCESS PANELS SHALL BE FLUSH AND LOCATIONS SHALL BE REVIEWED WITH THE ARCHITECT.

	General Notes
22.	IT IS INTENDED THAT THE FACE OF EVERY CONTINUOUS PARTITION BE FLUSH WITHOUT OFFSETS. CHANGE IN PARTITION THICKNESS SHALL OCCUR AT CORNERS OR OTHER FEATURES, WHICH INTERRUPT THE PLANS OF THE PARTITION. FACES OF CORRIDOR PARTITIONS SHALL ALIGN ALONG THE ENTIRE LENGTH OF THE CORRIDOR REGARDLESS OF PARTITION TYPE CHANGES.
23.	PROVIDE CONTINUOUS CONTROL JOINTS IN GWB WALLS AND CEILINGS WHERE INDICATED, OR IF NOT INDICATED, AT MAXIMUM SPACING OF 30'-0" ON CENTER. WALL AND CEILING JOINTS SHALL BE ALIGNED UNLESS SPECIFICALLY SHOWN OTHERWISE.
24.	AT THE INTERSECTION OF DISSIMILAR WALL TYPES, THE HIGHEST RATED WALL SHALL RUN THROUGH THE INTERSECTION IN ORDER TO MAINTAIN FIRE ENCLOSURE RATING. MAINTAIN FIRE RATING OF RATED WALLS AT INTERSECTION WITH COLUMN ENCLOSURES BY EXTENDING FIRE RATED CLOSURE AS REQUIRED.
25.	ALL PIPE AND OTHER PENETRATIONS THROUGH FIRE SEPARATION WALLS AND SLABS SHALL BE FIRE AND SMOKE STOPPED TO MAINTAINI THE REQUIRED FIRE RATINGS. ALL HORIZONTAL AND VERTICAL CONTROL AND EXPANSION JOINTS AT FIRE RATED ASSEMBLIES SHALL BE FIRE AND SMOKE STOPPED WITH FIRE SEALANT TO MAINTAIN THE REQUIRED FIRE RATINGS.
26.	ALL GAPS BETWEEN FIRE SEPARATION FLOOR SLAB EDGES AND CURTAIN WALLS SHALL BE SEALED CONTINUOUSLY WITH FIRE SAFING AND FIRE/SMOKE SEALANT. ALL SLIP JOINTS BETWEEN TOP OF CURTAIN WALL AND SLAB SHALL BE SEALED CONTINUOUSLY WITH FIRE SAFING AND FIRE/SMOKE SEALANT.
27.	GENERAL CONTRACTOR SHALL COORDINATE IT'S SUBCONTRACTORS SUCH THAT A SINGLE MANUFACTURER'S FIRE/SMOKE STOPPING PRODUCT IS USED THROUGHOUT THE PROJECT FOR EACH SPECIFIC FIRE/SMOKE STOPPING TYPE AND CONDITION.

	General Notes
28.	GENERAL CONTRACTOR SHALL COORDINATE AND SEQUENCE THE CLEANING AND PREPARATION OF ALL SURFACESF TO RECEIVE FIREPROOFING PRIOR TO FIREPROOFING INSTALLATION AS RECOMMENDED BY THE FIREPROOFING MATERIAL MANUFACTURER AND INSTALLER. HANGING DEVICES AND ATTACHMENTS TO FIREPROOFED STEEL SHALL BE DONE IN A MANNER TO MAINTAIN THE INTEGRITY AND SPECIFIED RATING OF A COMPLETE FIREPROOFING ASSEMBLY.
29.	JOINT SEALERS SHALL BE INSTALLED USING A BACKER ROD TO REDUCE THE DEPTH OF THE JOINT SO THAT THE SEALANT WILL HAVE AN HOURGLASS SHAPE OR MAXIMUM DEPTH AS RECOMMENDED BY THE MANUFACTURER. WHERE SPACE DOES NOT PERMIT THE USE OF A BACKER ROD, A BOND BREAK TAPE SHALL BE USED.
30.	ISOLATE DISSIMILAR METALS AND CORROSIVE MATERIALS FROM DIRECT CONTACT AS INDICTED OR BY THE USE OF NEOPRENE OR EPDM WASHERS/GASKETS OR BY OTHER SUITABLE MEANS TO ELIMINATE OPPORTUNITIES FOR GALVANIC ACTIONS.
31.	ALL INTERIOR WOOD BLOCKING SHALL BE FIRE TREATED.
32.	ALL ROOF AND EXTERIOR WOOD BLOCKING SHALL BE PRESSURE PRESERVATIVE TREATED.

Drawing Copyright © 2023

CHA
200 Corporate Place, Suite 110
Rocky Hill, CT 06067-1861
860.257.4557 www.chacompanies.com

DeGennaro Engineering
40 Oregan Trail, Waterford, NY 12188
T: 518-633-1400

University of Hartford

University of Hartford
200 BLOOMFIELD AVE
WEST HARTFORD, CT 06117

PLAN NORTH

TRUE NORTH

IT IS A VIOLATION OF LAW FOR ANY PERSON, UNLESS THEY ARE ACTING UNDER THE DIRECTION OF A LICENSED PROFESSIONAL ENGINEER, ARCHITECT, LANDSCAPE ARCHITECT OR LAND SURVEYOR TO ALTER AN ITEM IN ANY WAY. IF AN ITEM BEARING THE STAMP OF A LICENSED PROFESSIONAL ENGINEER, ARCHITECT, LANDSCAPE ARCHITECT OR LAND SURVEYOR SHALL STAMP THE DOCUMENT AND INCLUDE THE NOTATION "ALTERED BY" FOLLOWED BY THEIR SIGNATURE, THE DATE OF SUCH ALTERATION, AND A SPECIFIC DESCRIPTION OF THE ALTERATION.

UNIVERSITY OF HARTFORD ATHLETIC SPORTS COMPLEX

No.	Submittal / Revision	App'd	By	Date

PROJECT DATA, SYMBOLS, & ABBREVIATIONS

Designed By:	Drawn By:	Checked By:
KDL	VR	KRA
Issue Date:	Project No:	Scale:
1/13/2023	059815	AS SHOWN

Drawing No:

A-001

Central File: Update this text with Central file location
Saved: 1/13/2023 2:46:41 PM Current Local File: C:\Users\6446\Documents\059815 - ARCH22 - CENTRAL_amojahed5XJSZ.rvt

LIFE SAFETY SYMBOL KEY

# (dashed line)	PATH OF TRAVEL & OCCUPANT LOAD
FE	FIRE EXTINGUISHER

ROOM NAME
ROOM #
EGRESS WIDTH: SEE PLAN
CAPACITY FACTOR: SEE PLAN
ROOM CAPACITY: SEE PLAN

ROOM AREA: SEE PLAN
OCCUPANCY FACTOR: SEE PLAN
OCCUPANT LOAD: SEE PLAN

APPLICABLE BUILDING CODES:

BUILDING:	2022 CONNECTICUT STATE BUILDING CODE
ACCESSIBILITY:	ICC A117. 1-2017
ENERGY CONSERVATION:	2021 INTERNATIONAL ENERGY CONVERSATION CODE
ELECTRICAL:	2020 NATIONAL ELECTRICAL CODE (NFPA 70)
MECHANICAL:	2021 INTERNATIONAL MECHANICAL CODE
PLUMBING:	2022 INTERNATIONAL PLUMBING CODE
OTHER:	ICC 300-17

OCCUPANCY GROUPS PER BUILDING CODE CHAPTER 3

MECHANICAL/STORAGE: STORAGE, S-2

OCCUPANCY LOAD FACTORS PER BUILDING CODE CHAPETER 10 TABLE 1004.1.1

STORAGE/MECHANICAL/ ELECTRICAL: 300 GROSS

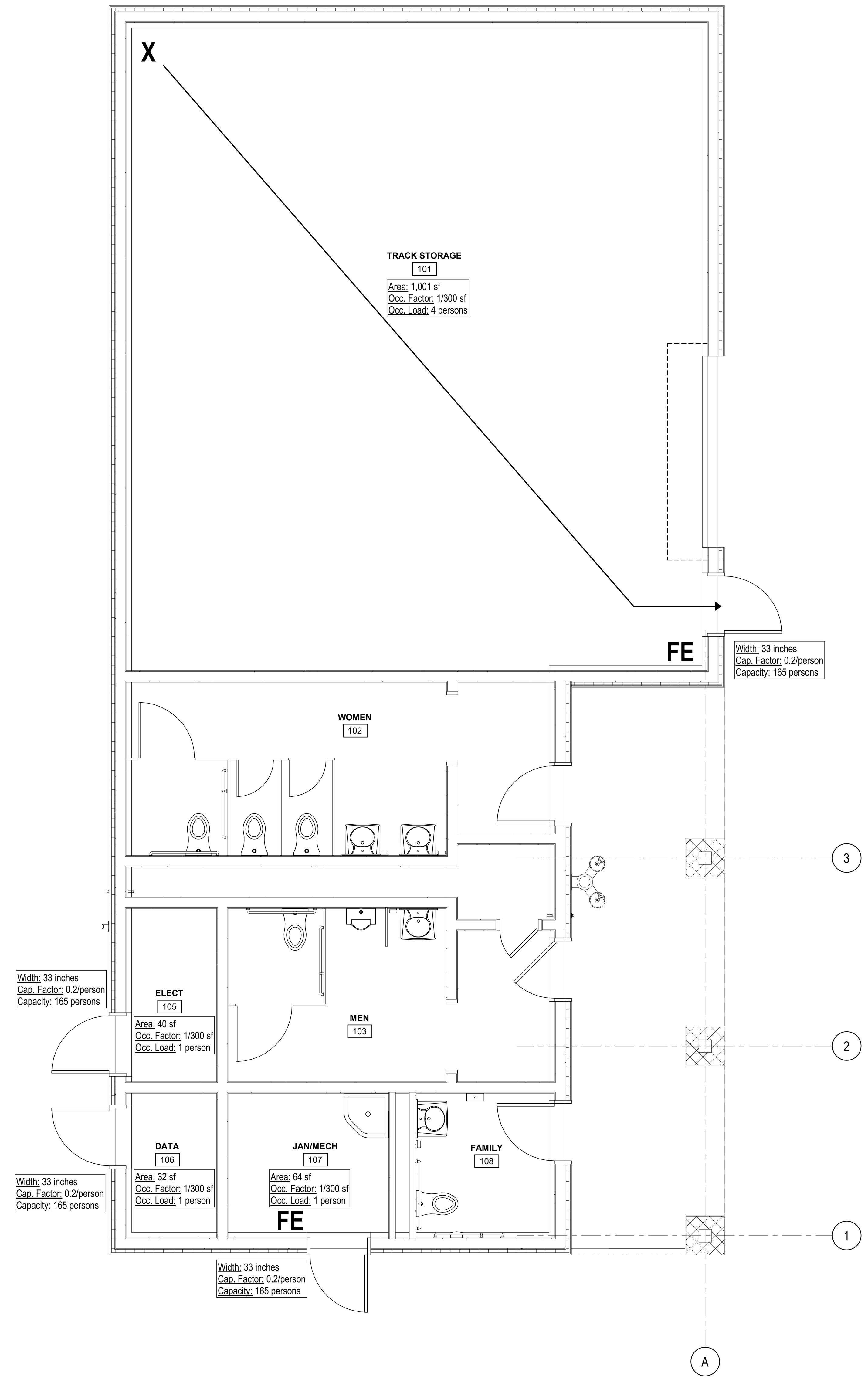

1 LIFE SAFETY PLAN
1/4" = 1'-0"

Drawing Copyright © 2023

CHA
200 Corporate Place, Suite 110
Rocky Hill, CT 06067-1861
860.257.4557 . www.chacompanies.com

DeGennaro Engineering
40 Oregan Trail, Waterford, NY 12188
T: 518-633-1400

University of Hartford

University of Hartford
200 BLOOMFIELD AVE
WEST HARTFORD, CT 06117

PLAN NORTH
TRUE NORTH

IT IS A VIOLATION OF LAW FOR ANY PERSON, UNLESS THEY ARE ACTING UNDER THE DIRECTION OF A LICENSED PROFESSIONAL ENGINEER, ARCHITECT, LANDSCAPE ARCHITECT OR LAND SURVEYOR TO ALTER AN ITEM IN ANY WAY. IF AN ITEM BEARING THE STAMP OF A LICENSED PROFESSIONAL IS ALTERED, THE ALTERING ENGINEER, ARCHITECT, LANDSCAPE ARCHITECT OR LAND SURVEYOR SHALL STAMP THE DOCUMENT AND INCLUDE THE NOTATION "ALTERED BY" FOLLOWED BY THEIR SIGNATURE, THE DATE OF SUCH ALTERATION, AND A SPECIFIC DESCRIPTION OF THE ALTERATION.

UNIVERSITY OF HARTFORD ATHLETIC SPORTS COMPLEX

No.	Submittal / Revision	App'd	By	Date

GROUND LEVEL LIFE SAFETY PLAN

Designed By: Designer	Drawn By: Author	Checked By: Checker
Issue Date: 1/13/2023	Project No: 059815	Scale: AS SHOWN

Drawing No:
A-010

Central File: Update this text with Central file location
Saved: 1/13/2023 2:46:42 PM Current Local File: C:\Users\6446\Documents\059815 - ARCH22 - CENTRAL_amojahed5XJSZ.rvt

RCP LEGEND

NOTES:
1 MECHANICAL AND ELECTRICAL ITEMS SHOWN FOR COORDINATION PURPOSES ONLY.
2 REFER TO MEP PLANS FOR CEILING EQUIPMENT LOCATIONS & SIZES.
3 SEE FINISH SCHEDULE FOR CEILING TYPES & FINISHES

Symbol	Description
(pattern)	DAFS CEILING
(symbol)	6" DIA LED DOWNLIGHT
(symbol)	LED UTILITY STRIP LIGHT
(symbol)	UTILITY WALL PACK

GENERAL NOTES:

1. DIMENSIONS ARE TO FACE OF STUD UNLESS NOTED OTHERWISE.
2. DIMENSIONS WITH AN * ARE TO FINISHED MATERIAL FACE.
3. PLUMBING FIXTURES MARKED WITH AN A* ARE TO BE INTALLED TO ACCESIBLE HEIGHTS.
4. PLUMBING FIXTURES MARKED WITH AN S* ARE TO BE INSTALLED TO STANDARD HEIGHTS.
5. FLOORS ARE TO BE STOPED TO FLOOR DRAINS WITH MAX 1:20 SLOPE.

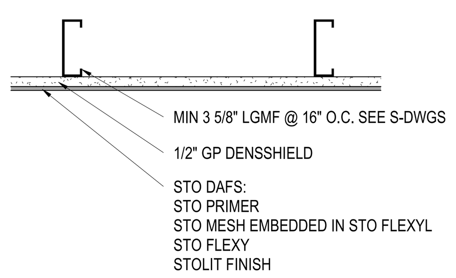

3 A-101 TYPICAL DAFS CEILING DETAIL
1 1/2" = 1'-0"

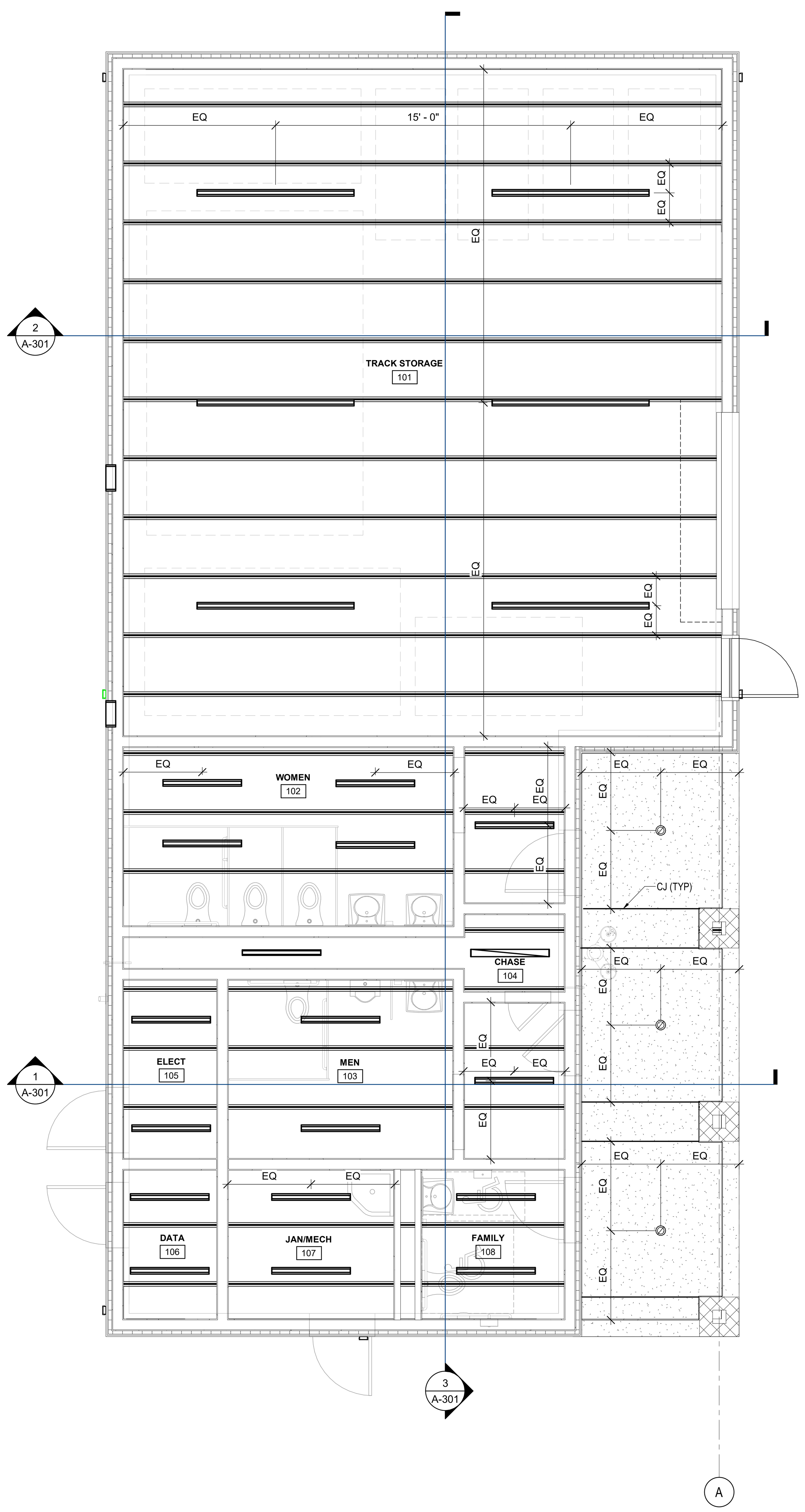

2 REFLECTED CEILING PLAN
1/4" = 1'-0"

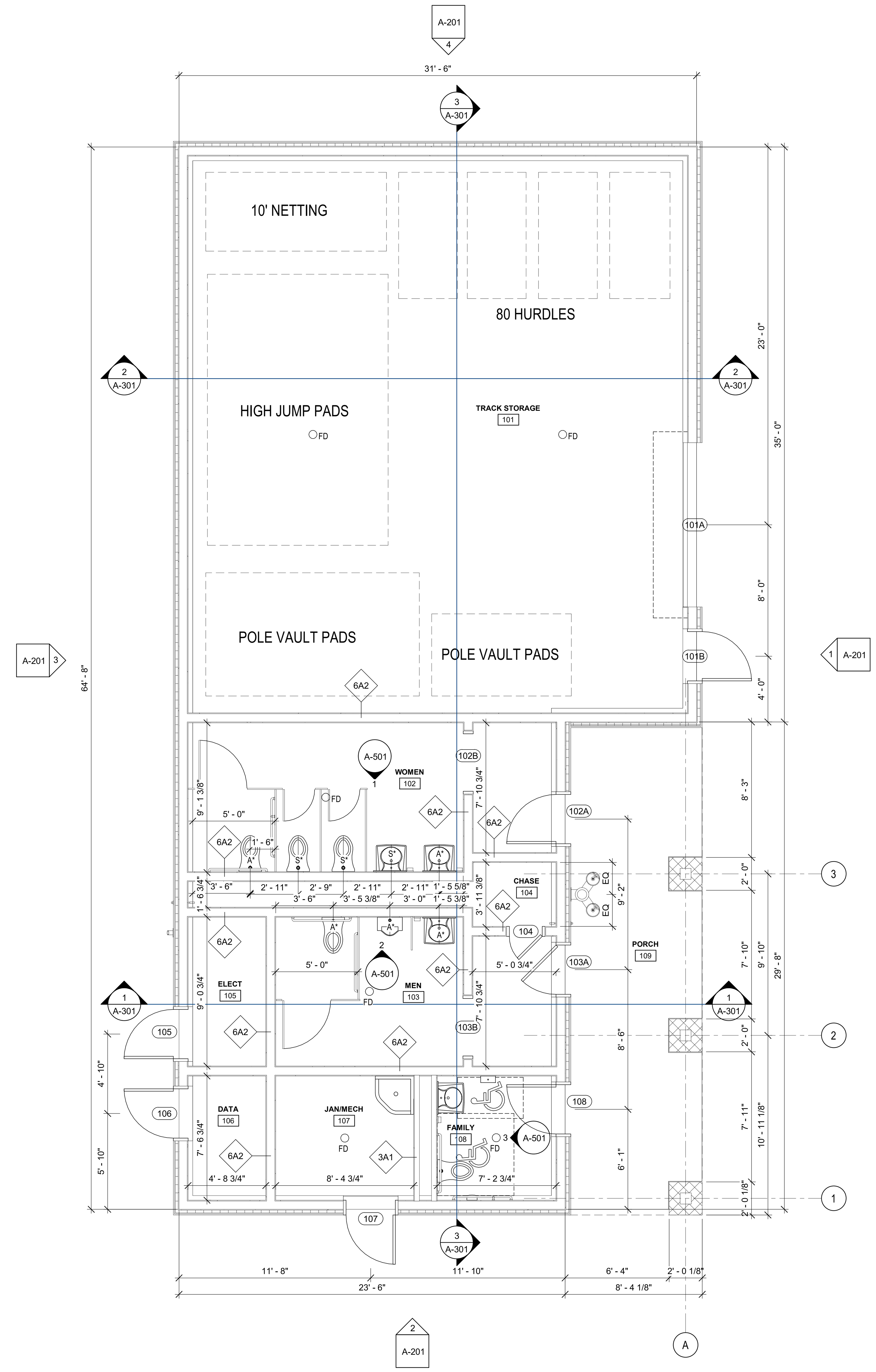

1 FLOOR PLAN
1/4" = 1'-0"

Central File: Update this text with Central file location
Saved: 1/13/2023 2:46:43 PM Current Local File: C:\Users\6446\Documents\059815 - ARCH22 - CENTRAL_amojahed5XJSZ.rvt

Drawing Copyright © 2023

CHA
200 Corporate Place, Suite 110
Rocky Hill, CT 06067-1861
860.257.4557 · www.chacompanies.com

DeGennaro Engineering
40 Oregan Trail, Waterford, NY 12188
T: 518-633-1400

University of Hartford

University of Hartford
200 BLOOMFIELD AVE
WEST HARTFORD, CT 06117

PLAN NORTH
TRUE NORTH

IT IS A VIOLATION OF LAW FOR ANY PERSON, UNLESS THEY ARE ACTING UNDER THE DIRECTION OF A LICENSED PROFESSIONAL ENGINEER, ARCHITECT, LANDSCAPE ARCHITECT OR LAND SURVEYOR TO ALTER AN ITEM IN ANY WAY. IF AN ITEM BEARING THE STAMP OF A LICENSED PROFESSIONAL IS ALTERED, THE ALTERING ENGINEER, ARCHITECT, LANDSCAPE ARCHITECT OR LAND SURVEYOR SHALL STAMP THE DOCUMENT AND INCLUDE THE NOTATION "ALTERED BY" FOLLOWED BY THEIR SIGNATURE, THE DATE OF SUCH ALTERATION, AND A SPECIFIC DESCRIPTION OF THE ALTERATION.

UNIVERSITY OF HARTFORD ATHLETIC SPORTS COMPLEX

No.	Submittal / Revision	App'd	By	Date

GROUND LEVEL & REFLECTED CEILING PLAN

Designed By:	Drawn By:	Checked By:
KDL	VR	KRA
Issue Date: 1/13/2023	Project No: 059815	Scale: AS SHOWN

Drawing No:

A-101

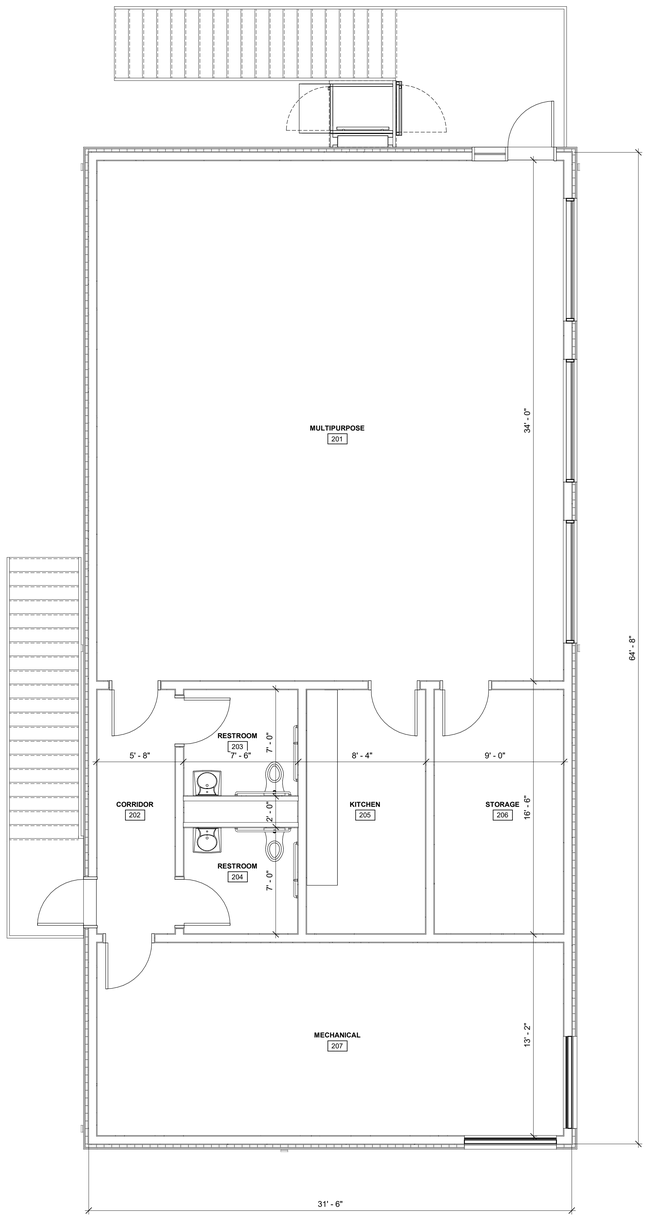

2 FUTURE UPPER LEVEL PLAN

1/4" = 1'-0"

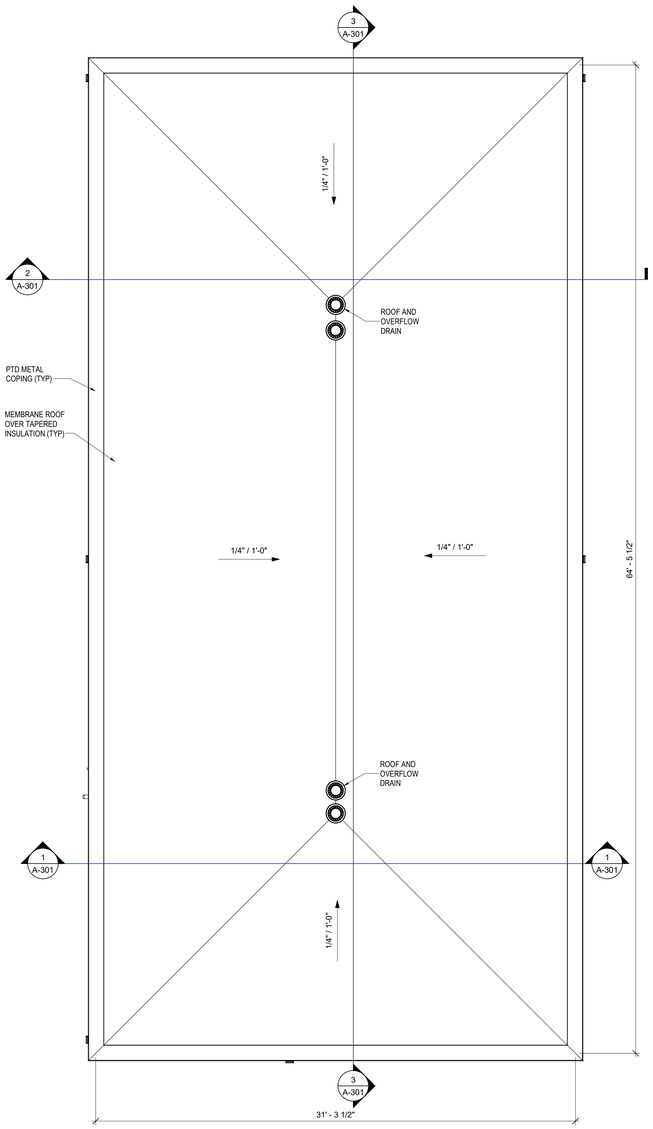

1 ROOF PLAN

1/4" = 1'-0"

Drawing Copyright © 2023

CHA
200 Corporate Place, Suite 110
Rocky Hill, CT 06067-1861
860.257.4557 www.chacompanies.com

DeGennaro Engineering
40 Oregan Trail, Waterford, NY 12188
T: 518-633-1400

University of Hartford

University of Hartford

200 BLOOMFIELD AVE
WEST HARTFORD, CT 06117

PLAN NORTH

TRUE NORTH

IT IS A VIOLATION OF LAW FOR ANY PERSON, UNLESS THEY ARE ACTING UNDER THE DIRECTION OF A LICENSED PROFESSIONAL ENGINEER, ARCHITECT, LANDSCAPE ARCHITECT OR LAND SURVEYOR TO ALTER AN ITEM IN ANY WAY. IF AN ITEM BEARING THE STAMP OF A LICENSED PROFESSIONAL IS ALTERED, THE ALTERING ENGINEER, ARCHITECT, LANDSCAPE ARCHITECT OR LAND SURVEYOR SHALL STAMP THE DOCUMENT AND INCLUDE THE NOTATION "ALTERED BY" FOLLOWED BY THEIR SIGNATURE, THE DATE OF SUCH ALTERATION, AND A SPECIFIC DESCRIPTION OF THE ALTERATION.

UNIVERSITY OF HARTFORD ATHLETIC SPORTS COMPLEX

No.	Submittal / Revision	App'd	By	Date

ROOF PLAN AND FUTURE UPPER LEVEL PLAN

Designed By:	Drawn By:	Checked By:
KDL	VR	KRA
Issue Date:	Project No:	Scale:
1/13/2023	059815	AS SHOWN

Drawing No:

A-102

Central File: Update this text with Central file location
Saved: 1/13/2023 2:46:44 PM Current Local File: C:\Users\6446\Documents\059815 - ARCH22 - CENTRAL_amojahed5XJSZ.rvt

EXTERIOR ELEVATION KEY	
Number	Description
1	CONCRETE FOUNDATION AND FOOTING
2	FIBER CEMENT SIDING
3	4" DECORATIVE CMU PIER
4	PTD METAL COPING
5	BI-LEVEL DRINKING FOUNTAIN W/BOTTLE FILLER
6	EXTERIOR LIGHT FIXTURE. SEE E-DWGS
7	ALUMINUM LOUVER. SEE M-DWGS
8	HOSE BIB. SEE P-DWGS.

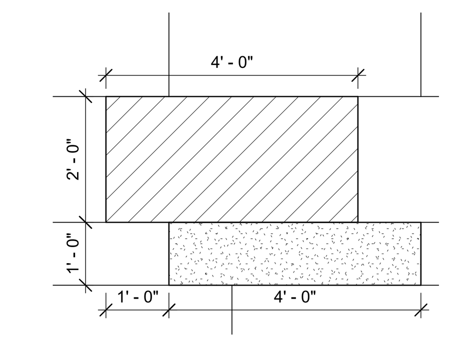

5 / A-201 ENLARGED ELEVATION
1/2" = 1'-0"

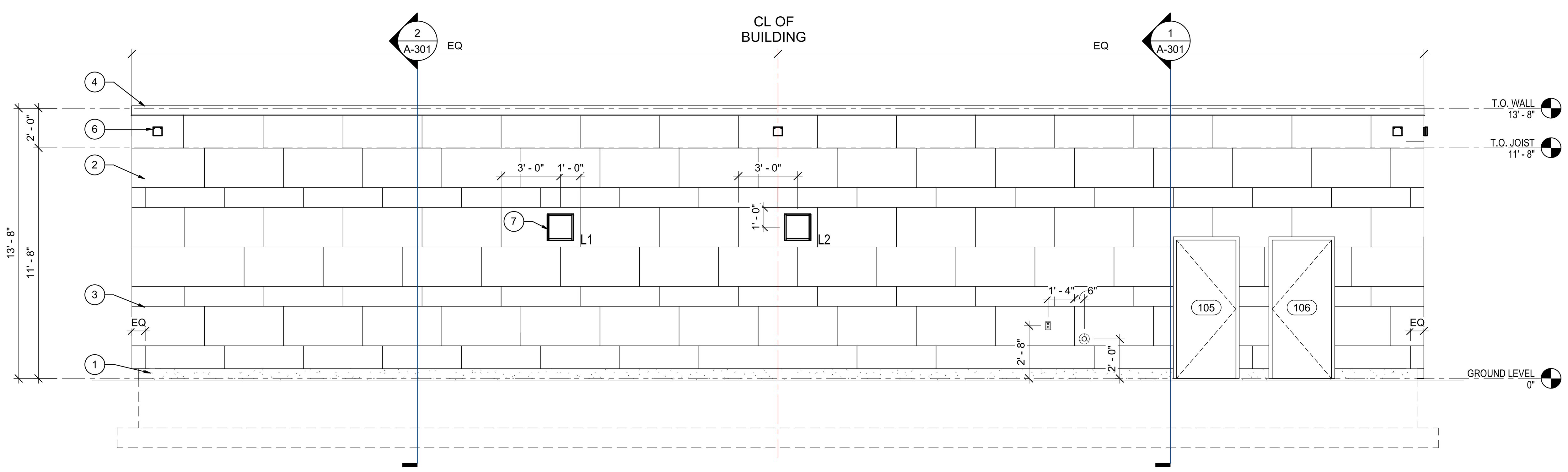

3 / A-201 EXTERIOR ELEVATION
1/4" = 1'-0"

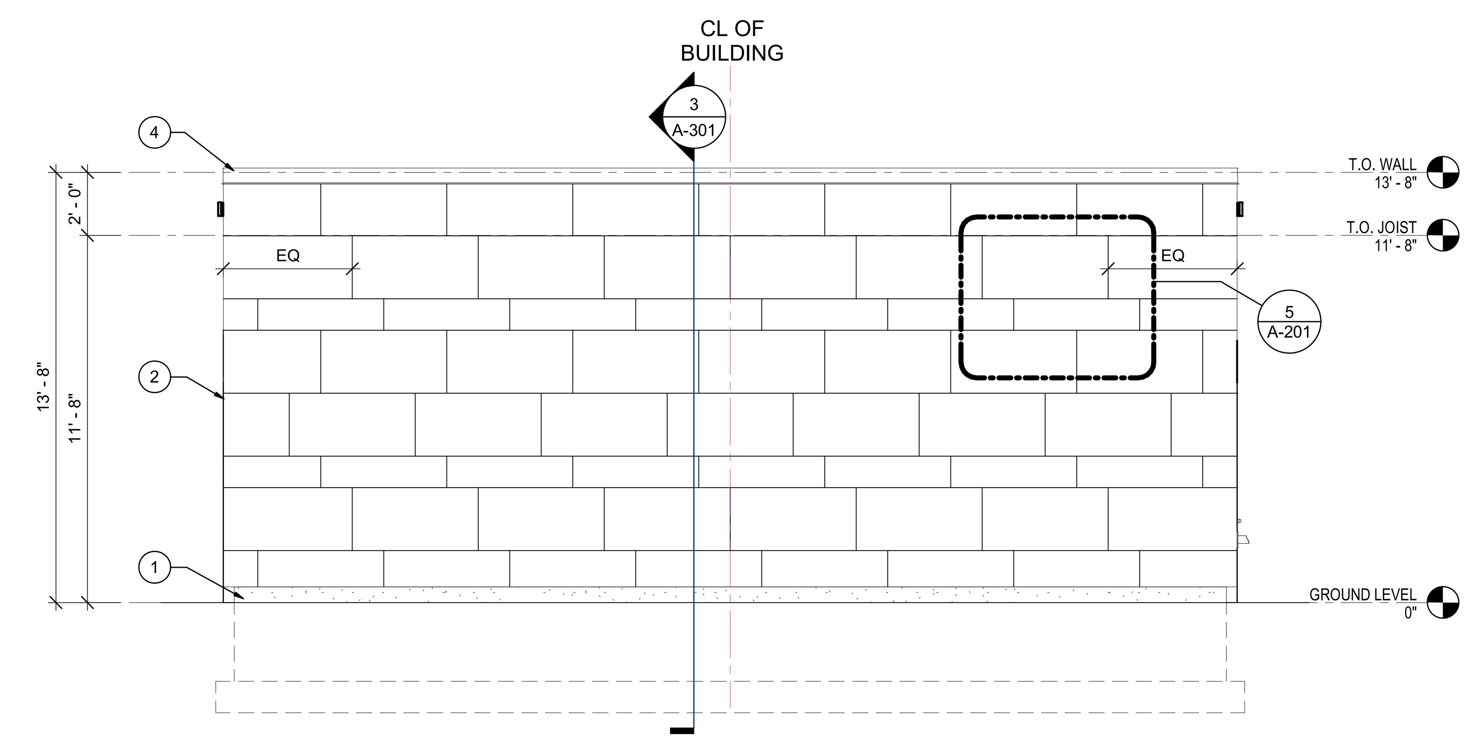

4 / A-201 EXTERIOR ELEVATION
1/4" = 1'-0"

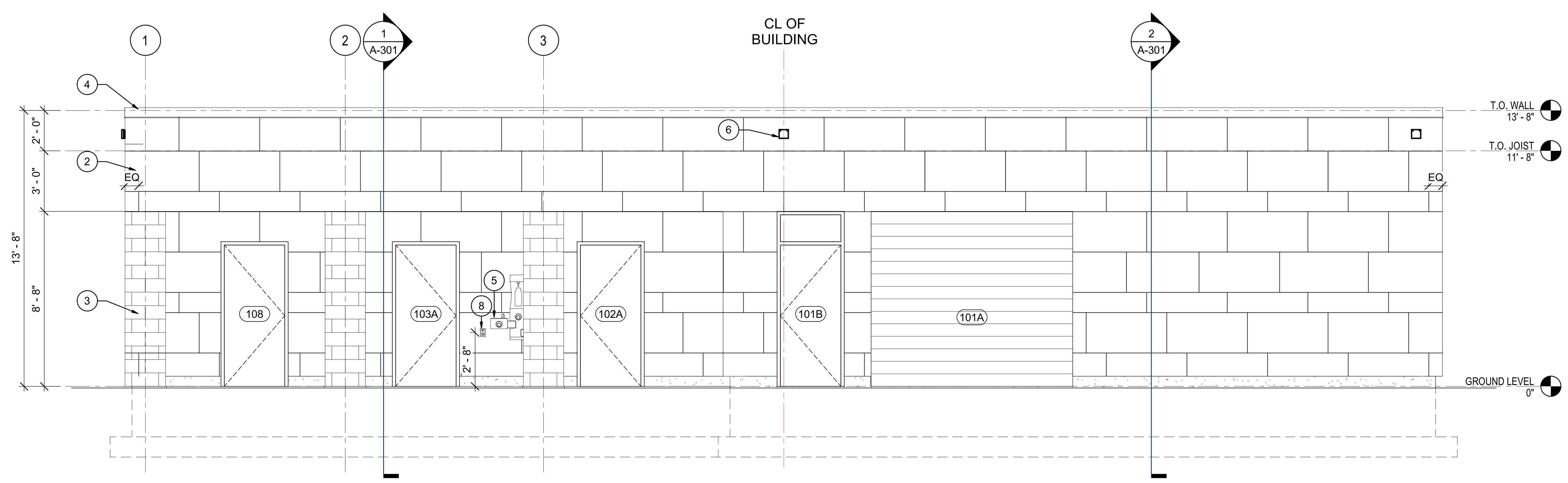

1 / A-201 EXTERIOR ELEVATION
1/4" = 1'-0"

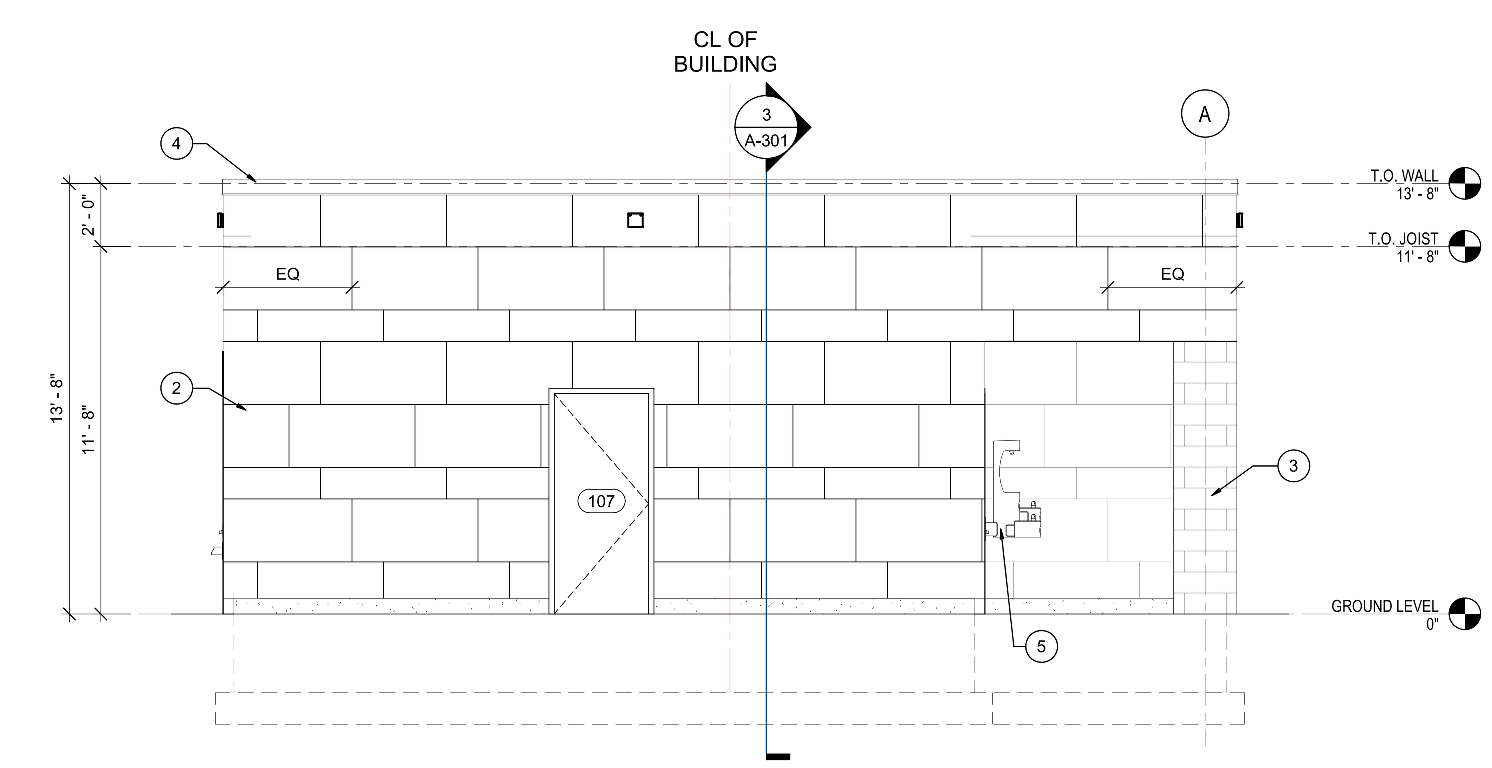

2 / A-201 EXTERIOR ELEVATION
1/4" = 1'-0"

Central File: Update this text with Central file location
Saved: 1/13/2023 2:46:44 PM Current Local File: C:\Users\6446\Documents\059815 - ARCH22 - CENTRAL_amojahed5XJSZ.rvt

Drawing Copyright © 2023

CHA
200 Corporate Place, Suite 110
Rocky Hill, CT 06067-1861
860.257.4557 · www.chacompanies.com

DeGennaro Engineering
40 Oregan Trail, Waterford, NY 12188
T: 518-633-1400

University of Hartford

University of Hartford
200 BLOOMFIELD AVE
WEST HARTFORD, CT 06117

IT IS A VIOLATION OF LAW FOR ANY PERSON, UNLESS THEY ARE ACTING UNDER THE DIRECTION OF A LICENSED PROFESSIONAL ENGINEER, ARCHITECT, LANDSCAPE ARCHITECT OR LAND SURVEYOR TO ALTER AN ITEM IN ANY WAY. IF AN ITEM BEARING THE STAMP OF A LICENSED PROFESSIONAL IS ALTERED, THE ALTERING ENGINEER, ARCHITECT, LANDSCAPE ARCHITECT OR LAND SURVEYOR SHALL STAMP THE DOCUMENT AND INCLUDE THE NOTATION "ALTERED BY" FOLLOWED BY THEIR SIGNATURE, THE DATE OF SUCH ALTERATION, AND A SPECIFIC DESCRIPTION OF THE ALTERATION.

UNIVERSITY OF HARTFORD ATHLETIC SPORTS COMPLEX

No.	Submittal / Revision	App'd	By	Date

EXTERIOR ELEVATIONS

Designed By:	Drawn By:	Checked By:
KDL	VR	KRA
Issue Date:	Project No:	Scale:
1/13/2023	059815	AS SHOWN

Drawing No:

A-201

Drawing Copyright © 2023

CHA
200 Corporate Place, Suite 110
Rocky Hill, CT 06067-1861
860.257.4557 · www.chacompanies.com

DeGennaro Engineering
40 Oregan Trail, Waterford, NY 12188
T: 518-633-1400

University of Hartford

University of Hartford
200 BLOOMFIELD AVE
WEST HARTFORD, CT 06117

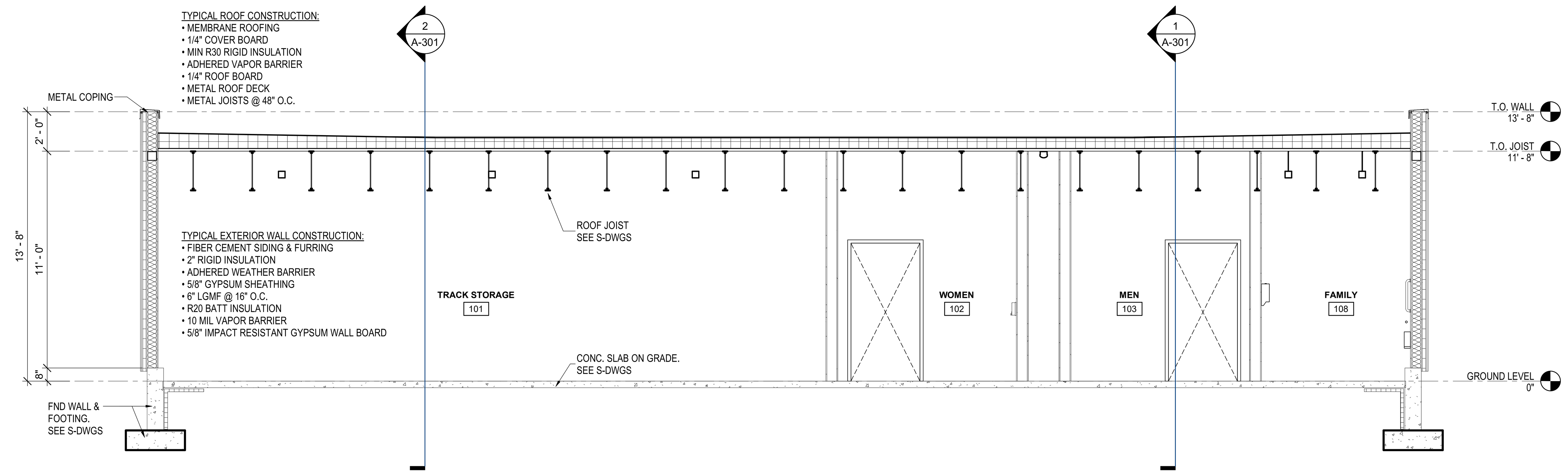

3 A-301 SECTION C-C
1/4" = 1'-0"

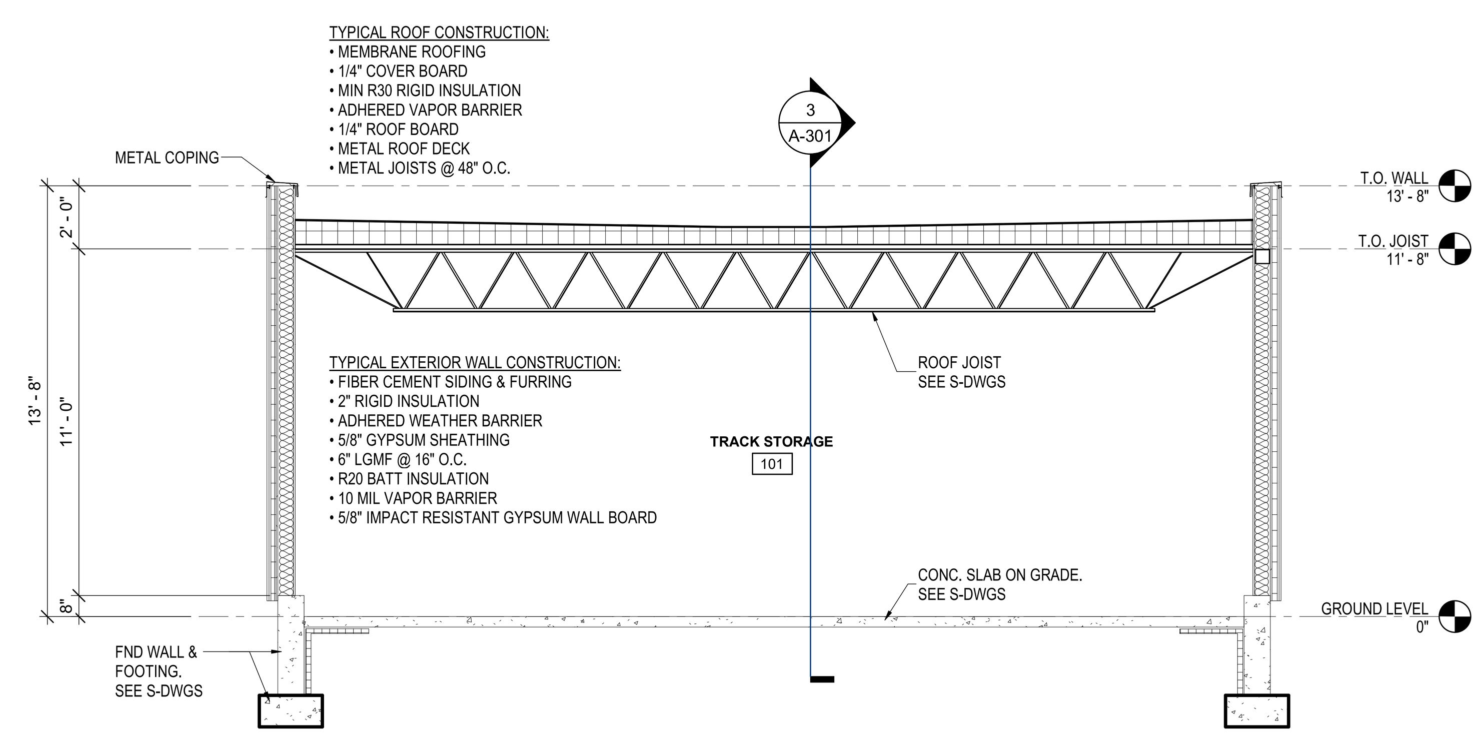

2 A-301 SECTION B-B
1/4" = 1'-0"

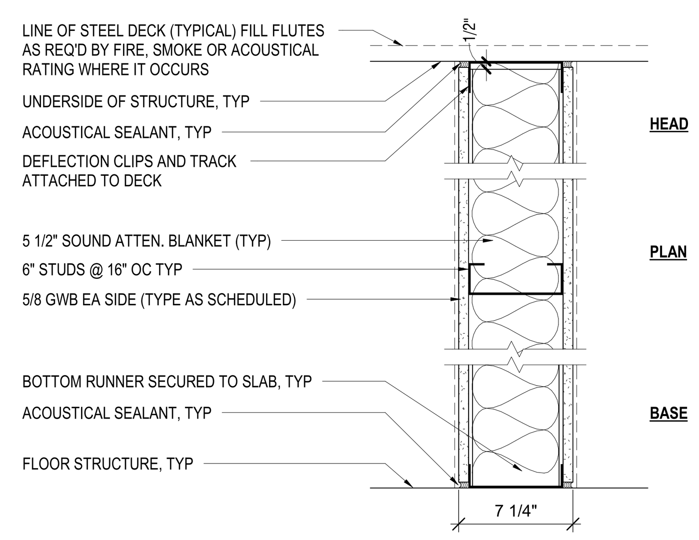

6 A-301 WALL TYPE 6A2
1 1/2" = 1'-0"

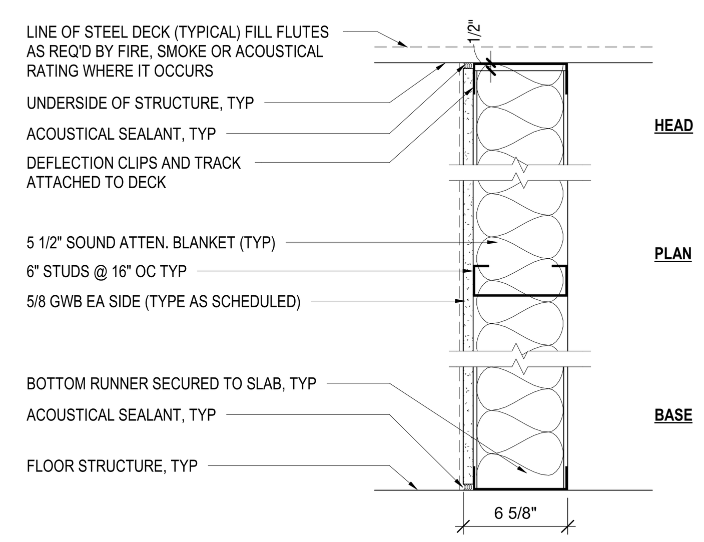

7 WALL TYPE 6A1
1 1/2" = 1'-0"

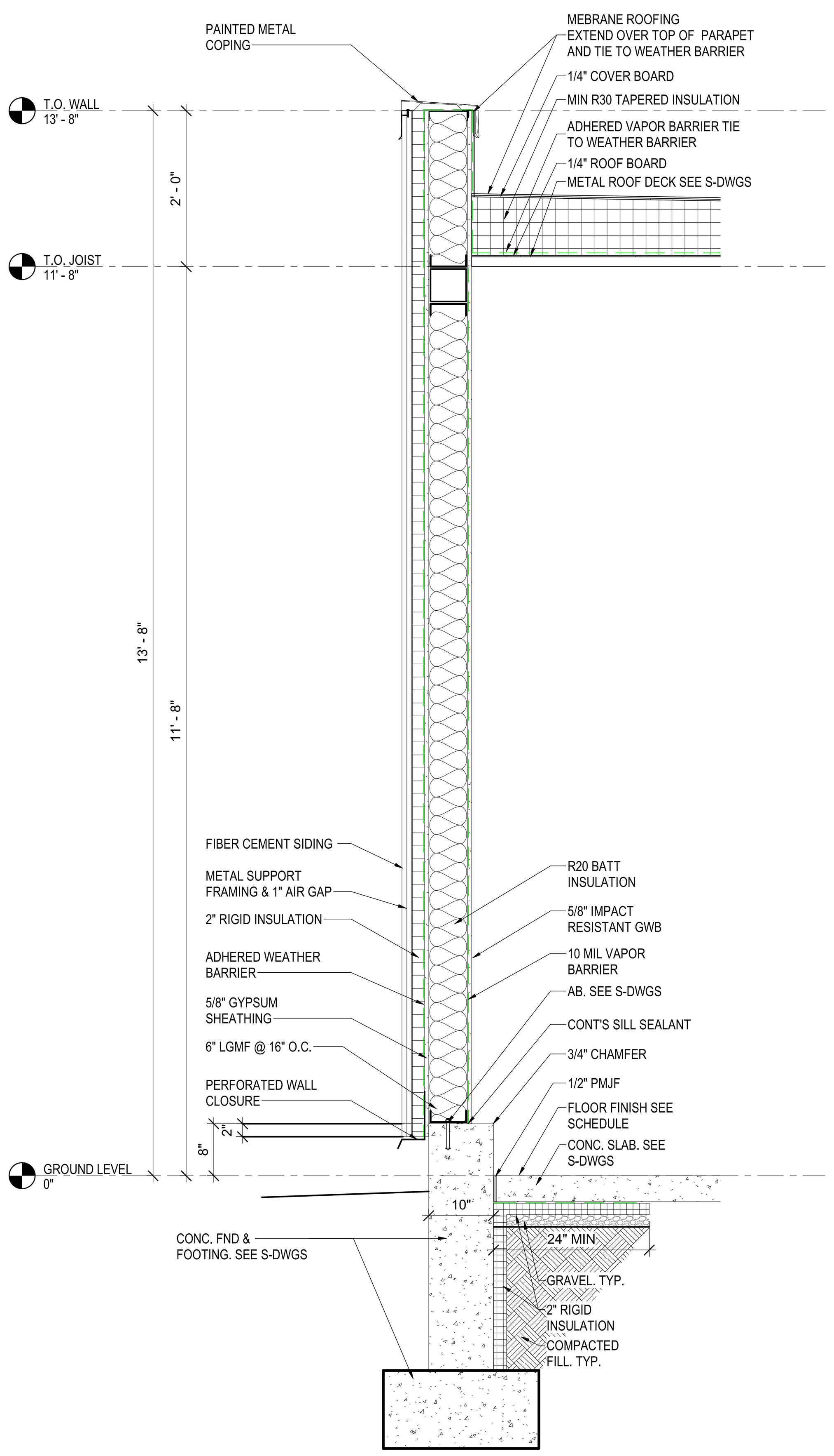

4 A-301 TYPICAL WALL SECTION
3/4" = 1'-0"

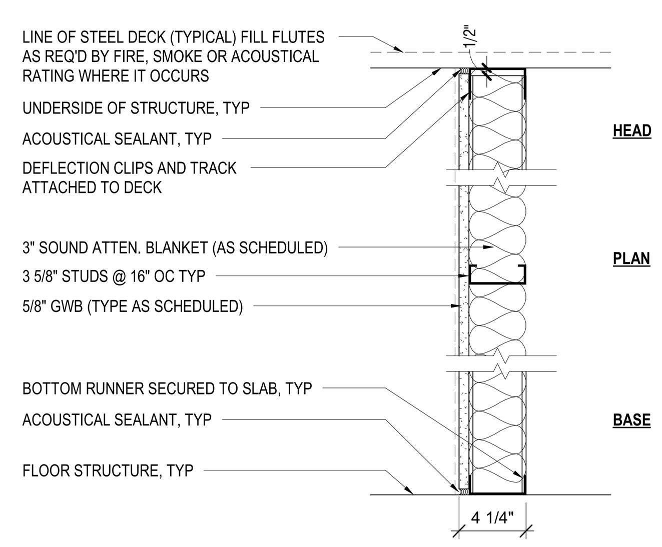

5 A-301 WALL TYPE 3A1
1 1/2" = 1'-0"

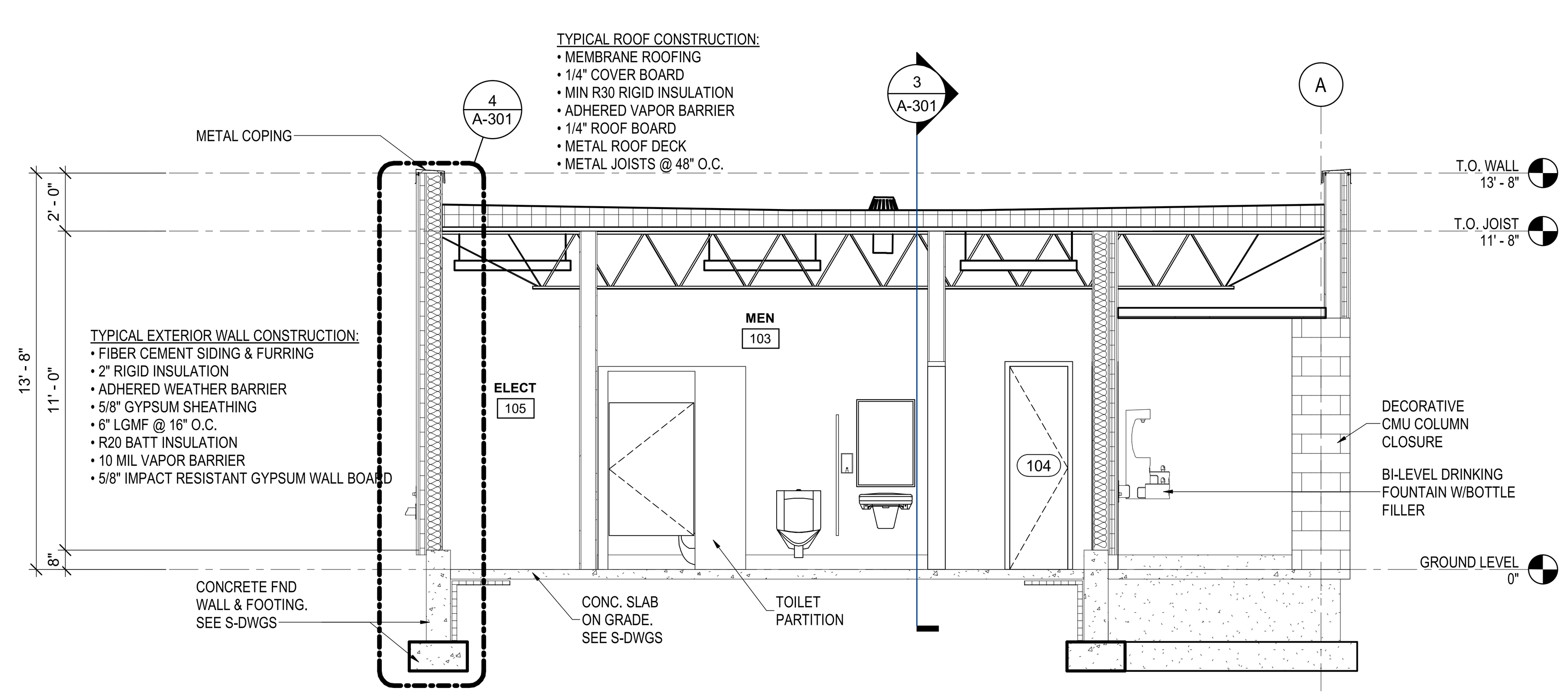

1 A-301 SECTION A-A
1/4" = 1'-0"

IT IS A VIOLATION OF LAW FOR ANY PERSON, UNLESS THEY ARE ACTING UNDER THE DIRECTION OF A LICENSED PROFESSIONAL ENGINEER, ARCHITECT, LANDSCAPE ARCHITECT OR LAND SURVEYOR TO ALTER AN ITEM IN ANY WAY. IF AN ITEM BEARING THE STAMP OF A LICENSED PROFESSIONAL IS ALTERED, THE ALTERING ENGINEER, ARCHITECT, LANDSCAPE ARCHITECT OR LAND SURVEYOR SHALL STAMP THE DOCUMENT AND INCLUDE THE NOTATION "ALTERED BY" FOLLOWED BY THEIR SIGNATURE, THE DATE OF SUCH ALTERATION, AND A SPECIFIC DESCRIPTION OF THE ALTERATION.

UNIVERSITY OF HARTFORD ATHLETIC SPORTS COMPLEX

No.	Submittal / Revision	App'd	By	Date

BUILDING & WALL SECTIONS AND DETAILS

Designed By: KDL	Drawn By: AM	Checked By: KRA
Issue Date: 1/13/2023	Project No: 059815	Scale: AS SHOWN

Drawing No:
A-301

Central File: Update this text with Central file location
Saved: 1/13/2023 2:46:46 PM Current Local File: C:\Users\6446\Documents\059815 - ARCH22 - CENTRAL_amojahed5XJSZ.rvt

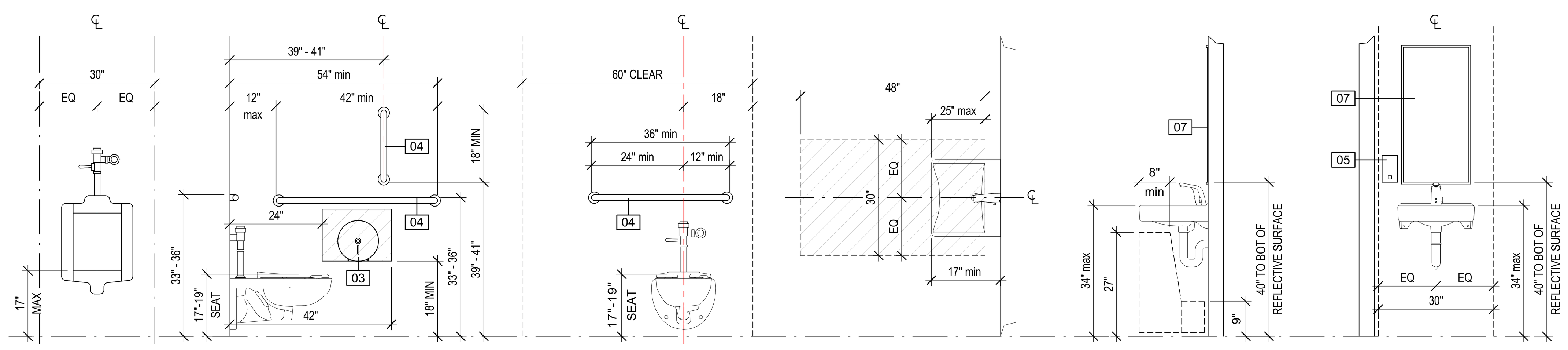

ACCESSIBLE URINAL
FRONT ELEVATION

(A) ACCESSIBLE TOILET
SIDE ELEVATION

(A) ACCESSIBLE TOILET
FRONT ELEVATION

(A) ACCESSIBLE LAVATORY CLEAR
FLOOR SPACE

(A) ACCESSIBLE LAVATORY
SIDE ELEVATION

(A) ACCESSIBLE LAVATORY
FRONT ELEVATION

Toilet Accessory Schedule

Number	Description	Manufacturer	Model	Notes
01	PAPER TOWEL DISPENSER	NOIR JBT JR./TITAN	SCT09740	*1
02	SANITARY NAPKIN DISPOSAL	*APPEAL*	APP18107	*3
03	TOILET PAPER DISPENSER	NOIR JBT JR.	SPP09645	*1
04	GRAB BAR	BOBRICK	VARIES	*4
05	LIQUID SOAP DISPENSER	*APPEAL*	APP17104	*1
06	JANITOR'S CLOSET SHELF	BOBRICK	B239-34	*2
07	MIRROR	BOBRICK	B290-2436	*1
08	COAT HOOK	BOBRICK	B211/B212	*1

NOTES: SEE PLUMBING SCHEDULE FOR FIXTURES

U.N.O. ALL TO BE SUPPLIED AND INSTALLED BY GC

*1 INSTALL IN ALL RESTROOMS U.N.O. LOCATION & QUANTITY PER PLAN

*2 INSTALL IN ALL JANITOR'S CLOSETS U.N.O.

*3 INSTALL IN ALL WOMENS BATHROOM STALLS ONLY

*4 INSTALL IN ALL ACCESSIBLE TOILET COMPARTMENTS

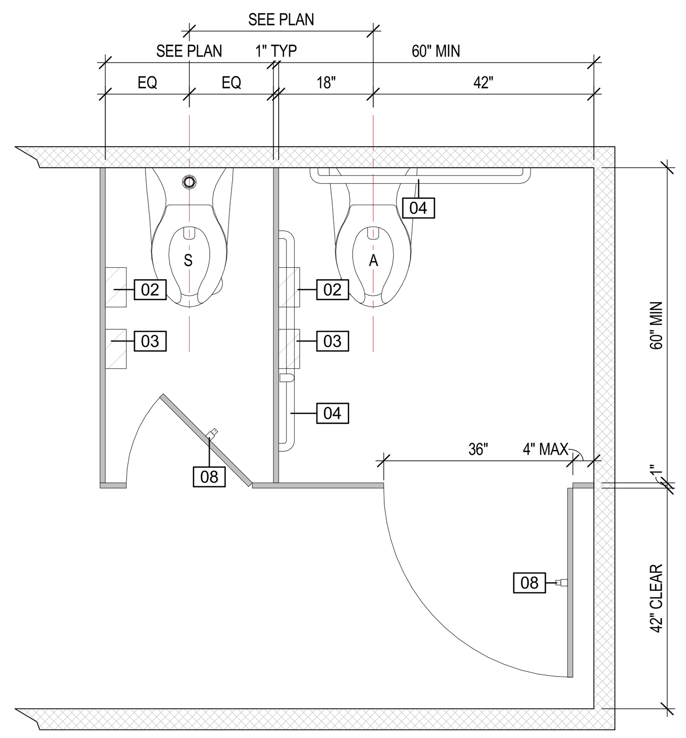

(A) ACCESSIBLE & (S) STANDARD TOILET
COMPARTMEN FLOOR PLAN

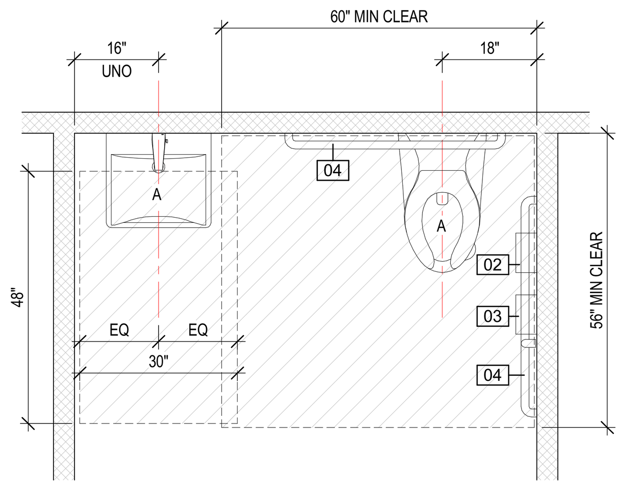

TYPICAL SINGLE USER FIXTURE PLAN

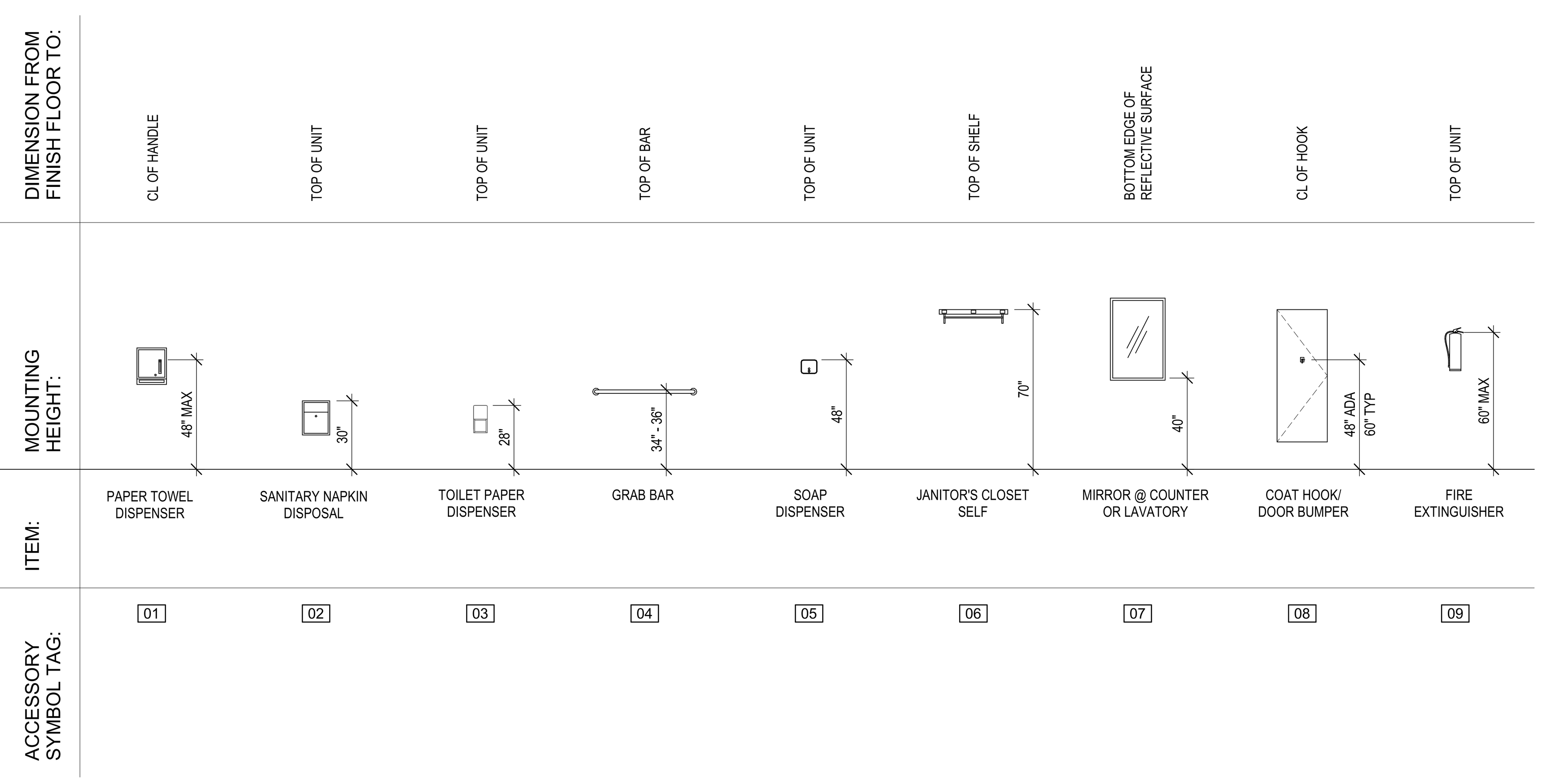

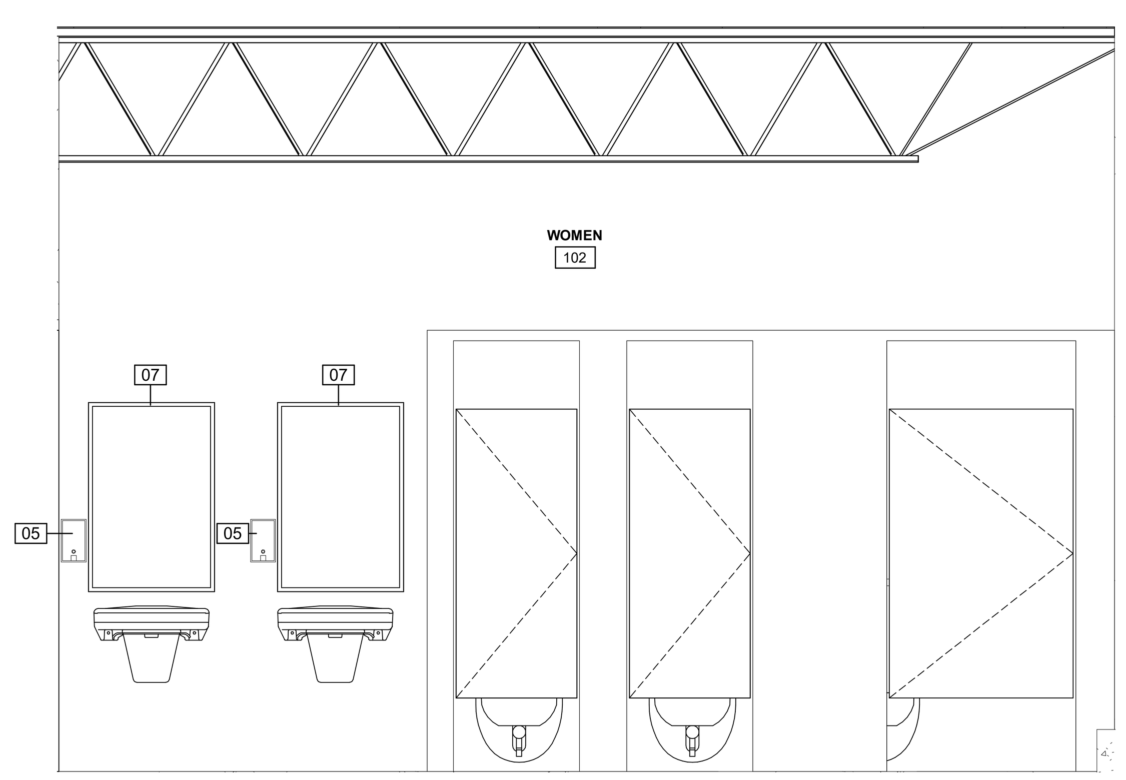

1
A-501
ROOM 102 INTERIOR ELEVATION
1/2" = 1'-0"

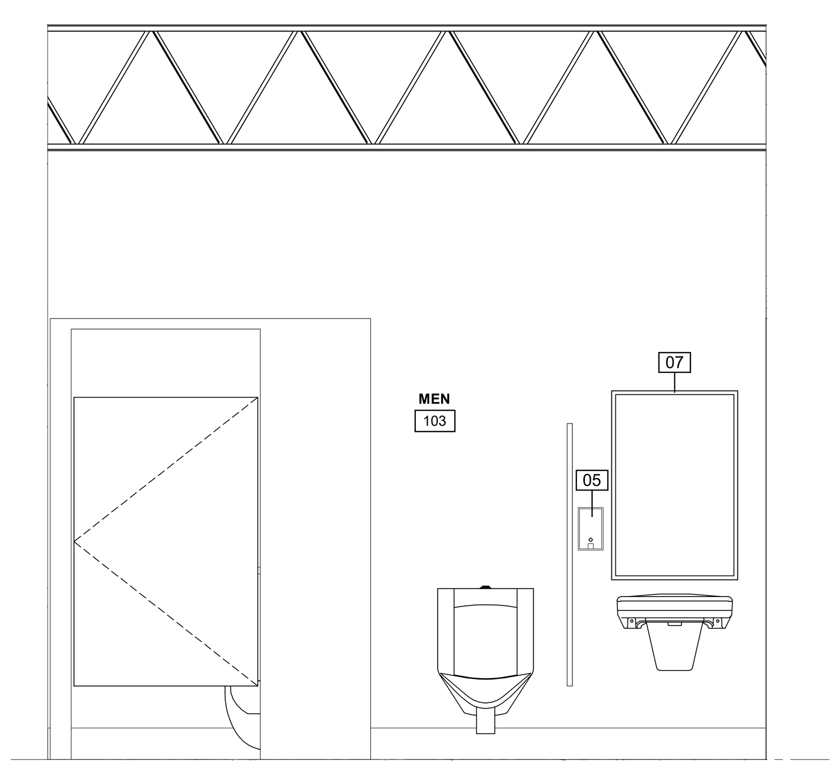

2
A-501
ROOM 103 INTERIOR ELEVATION
1/2" = 1'-0"

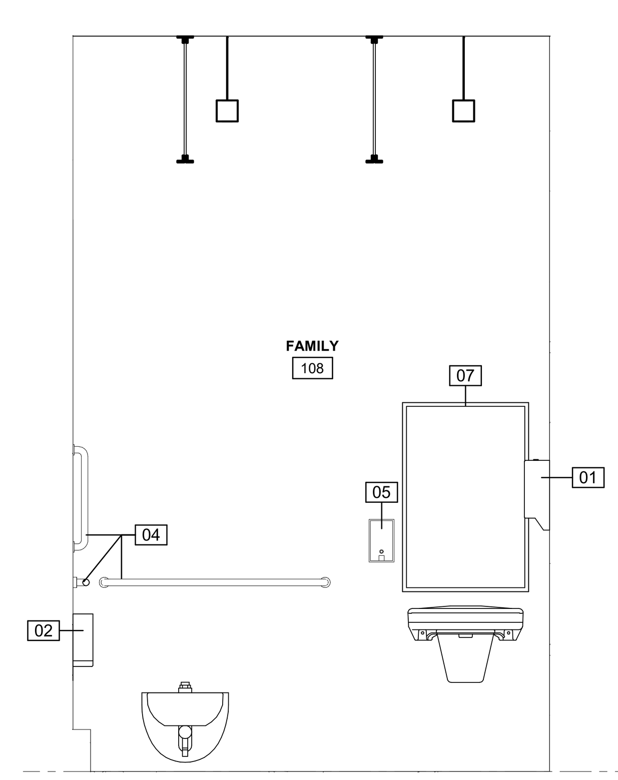

3
A-501
ROOM 108 INTERIOR ELEVATION
1/2" = 1'-0"

Central File: Update this text with Central file location
Saved: 1/13/2023 2:46:47 PM Current Local File: C:\Users\6446\Documents\059815 - ARCH22 - CENTRAL_amojahed5XJSZ.rvt

Drawing Copyright © 2023

CHA
200 Corporate Place, Suite 110
Rocky Hill, CT 06067-1861
860.257.4557 · www.chacompanies.com

DeGennaro Engineering
40 Oregan Trail, Waterford, NY 12188
T: 518-633-1400

University of Hartford

University of
Hartford

200 BLOOMFIELD AVE
WEST HARTFORD, CT 06117

IT IS A VIOLATION OF LAW FOR ANY PERSON, UNLESS THEY ARE ACTING UNDER THE DIRECTION OF A LICENSED PROFESSIONAL ENGINEER, ARCHITECT, LANDSCAPE ARCHITECT OR LAND SURVEYOR TO ALTER AN ITEM IN ANY WAY. IF AN ITEM BEARING THE STAMP OF A LICENSED PROFESSIONAL IS ALTERED, THE ALTERING ENGINEER, ARCHITECT, LANDSCAPE ARCHITECT OR LAND SURVEYOR SHALL STAMP THE DOCUMENT AND INCLUDE THE NOTATION "ALTERED BY" FOLLOWED BY THEIR SIGNATURE, THE DATE OF SUCH ALTERATION, AND A SPECIFIC DESCRIPTION OF THE ALTERATION.

UNIVERSITY OF
HARTFORD ATHLETIC
SPORTS COMPLEX

No.	Submittal / Revision	App'd	By	Date

TOILET & ACCESSIBILITY
DETAILS

Designed By:	Drawn By:	Checked By:
KDL	VR	KRA
Issue Date: 1/13/2023	Project No: 059815	Scale: AS SHOWN

Drawing No:

A-501

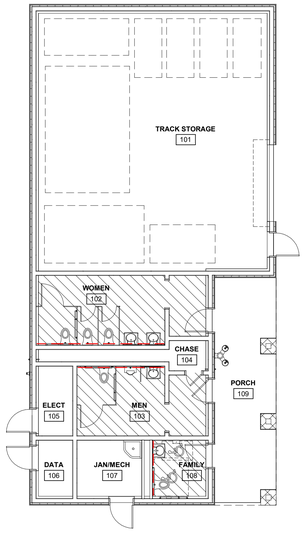

FLOOR FINISH LEGEND

- HPF-1
- SC
- ACCENT WALL PAINT

FINISH PLAN

4 / A-601 — 1/8" = 1'-0"

ROOM FINISH SCHEDULE								
Room Number	Room Name	Floor	Base	Walls		Ceiling		Notes
				Material	Finish	Material	Finish	
101	TRACK STORAGE	SC	WB	GWB	PT-1	EXP	PTD	
102	WOMEN	HPF-1	HPF	GWB	PT-1	EXP	PTD	PT-4 AT ACCENT WALL
103	MEN	HPF-1	HPF	GWB	PT-1	EXP	PTD	PT-4 AT ACCENT WALL
104	CHASE	SC	N/A	N/A	N/A	N/A	N/A	
105	ELECT	SC	WB	GWB	PT-1	EXP	PTD	
106	DATA	SC	WB	GWB	PT-1	EXP	PTD	
107	JAN/MECH	SC	WB	GWB	PT-1	EXP	PTD	
108	FAMILY	HPF-1	HPF	GWB	PT-1	EXP	PTD	PT-4 AT ACCENT WALL

MATERIAL & COLOR LEGEND					
TYPE	DESCRIPTION	BASIS-OF DESIGN	COLOR	FINISH	NOTES
FLOORING					
SC	SEALED CONCRETE	ASHFORD FORMULA	CLEAR	-	
HPF-1	HIGH PERFORMANCE FLOORING	SHERWIN WILLIAMS "DECO QUARTZ" BC 23	"MIDNIGHT"	-	
WALL BASES					
WB	TYPICAL RUBBER BASE @ PT-1	TARKETT 4" RUBBER BASE	"BONE WHITE" #79	-	
HPB-1	HIGH PERFORMANCE BUILT-UP COVED BASE - 6" HEIGHT	TNEMEC "SERIES 206 SUB-FLEX EPOXY FLOORING SYSTEM"	TO MATCH FLOOR COLOR	-	
WALL MATERIAL					
GWB	GYPSUM WALL BOARD	SEE SPECIFICATIONS	SEE WALL FINISHES	SEE WALL FINISHES	MOISTURE RESISTANT AT RESTROOMS - IMPACT RESISTANT AT STORAGE
PAINT FINISHES					
PT-1	TYPICAL WALL PAINT	SHERWIN WILLIAMS SUPERPAINT	"DOVER WHITE" SW#6385	VELVET FINISH	
PT-2	INTERIOR HOLLOW METAL DOORS AND FRAMES	SHERWIN WILLIAMS	"NAVAJO WHITE" SW#6126	SEMI-GLOSS FINISH	
PT-3	SOFFIT/FASCIA/CEILING	SHERWIN WILLIAMS PROMAR 200 ZERO VOC	"HIGH REFLECTIVE WHITE" SW#7757	LOW GLOSS EGGSHEL FINISH	
PT-4	ACCENT WALL	SHERWIN WILLIAMS	"RAVE RED" SW#6608	SEMI-GLOSS FINISH	
PT-5	EXTERIOR HOLLOW METAL DOORS AND FRAMES	SHERWIN WILLIAMS	COLOR TO MATCH SIDING	SEMI-GLOSS FINISH	
EXTERIOR MATERIALS					
FSRS	FIBER CEMENT RAIN SCREEN PANELS	EQUITONE "TECTIVA"	TE 20 (GREY)	-	
GFCMU	GROUND FACE CMU	JANDRIS	MATCH EXISTING BUILDINGS	-	
MISCELLANEOUS					
TP	TOILET PARTITIONS	SCRANTON PRODUCTS "HINY HIDERS"	"STAINLESS"	-	TEXTURE "ORANGE PEEL"

DOOR SCHEDULE																
Door Number	Room Name	DOOR						FRAME						Hrdwr Set	Rating	Remarks
		Width	Height	Material	Finish	Thickness	Type	Material	Finish	Sill	Jamb	Head	Type			
101A	TRACK STORAGE	10' - 0"	8' - 8"	STAINLESS STEEL	-	3"	OH	STEEL	PT-2	1A/A601	1B/A601	1C/A601	OH	05	-	PROVIDE INTERIOR AND EXTERIOR CONTROLS
101B	TRACK STORAGE	3' - 0"	7' - 0"	STEEL	PT-2/3	1 3/4"	F	STEEL		2A/A601	2B/A601	2C/A601	F2	01	-	
102A	WOMEN	3' - 0"	7' - 0"	STEEL	PT-2/3	1 3/4"	F	STEEL	PT-2	2A/A601	2B/A601	2C/A601	F1	02	-	
102B	WOMEN	3' - 6"	7' - 0"	N/A	N/A	0"	N/A	STEEL	PT-2	-	3A/A601	3B/A601	F1	-	-	CASED OPENING
103A	MEN	3' - 0"	7' - 0"	STEEL	PT-2/3	1 3/4"	F	STEEL	PT-2/3	2A/A601	2B/A601	2C/A601	F1	02	-	
103B	MEN	3' - 6"	7' - 0"	N/A	N/A	0"	N/A	STEEL	PT-2	-	3A/A601	3B/A601	F1	-	-	CASED OPENING
104	CHASE	2' - 0"	7' - 0"	STEEL	PT-2	1 3/4"	F	STEEL	PT-2	-	3A/A601	3B/A601	F1	04	-	
105	ELEC	3' - 0"	7' - 0"	STEEL	PT-2/3	1 3/4"	F	STEEL	PT-2/3	2A/A601	2B/A601	2C/A601	F1	01	-	
106	DATA	3' - 0"	7' - 0"	STEEL	PT-2/3	1 3/4"	F	STEEL	PT-2/3	2A/A601	2B/A601	2C/A601	F1	01	-	
107	JAN/MECH	3' - 0"	7' - 0"	STEEL	PT-2/3	1 3/4"	F	STEEL	PT-2/3	2A/A601	2B/A601	2C/A601	F1	01	-	
108	FAMILY	3' - 0"	7' - 0"	STEEL	PT-2/3	1 3/4"	F	STEEL	PT-2/3	2A/A601	2B/A601	2C/A601	F1	03	-	

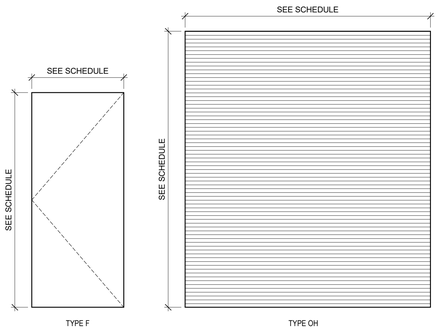

DOOR TYPES

1/2" = 1'-0"

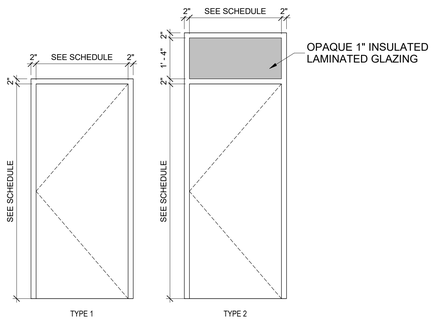

FRAME TYPES

1/2" = 1'-0"

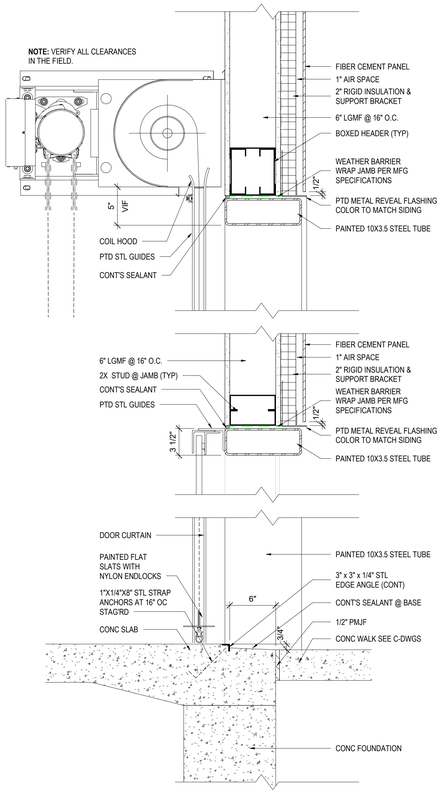

1 / A-601 — OVERHEAD DOOR DETAIL

1 1/2" = 1'-0"

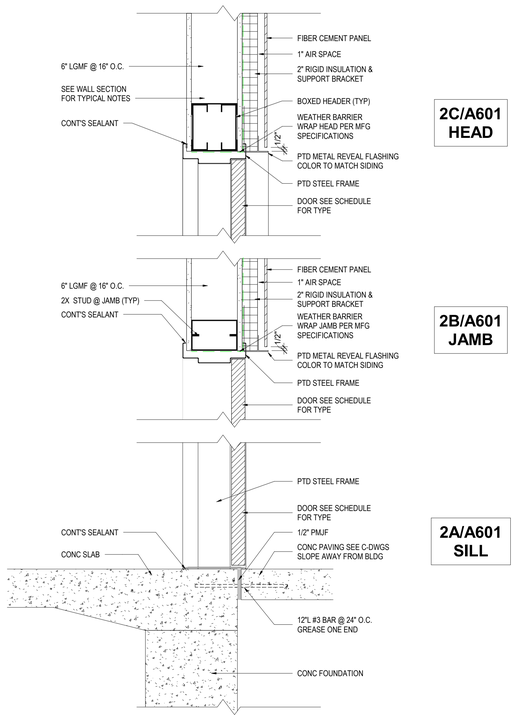

2 / A-601 — TYPICAL EXTERIOR DOOR DETAIL

1 1/2" = 1'-0"

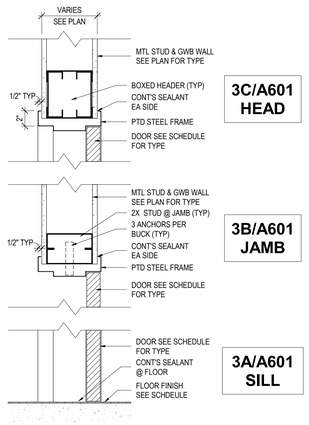

3 / A-601 — TYPICAL INTERIOR DOOR DETAIL

1 1/2" = 1'-0"

Drawing Copyright © 2023

CHA
200 Corporate Place, Suite 110
Rocky Hill, CT 06067-1861
860.257.4557 www.chacompanies.com

DeGennaro Engineering
40 Oregan Trail, Waterford, NY 12188
T: 518-633-1400

University of Hartford

University of Hartford
200 BLOOMFIELD AVE
WEST HARTFORD, CT 06117

IT IS A VIOLATION OF LAW FOR ANY PERSON, UNLESS THEY ARE ACTING UNDER THE DIRECTION OF A LICENSED PROFESSIONAL ENGINEER, ARCHITECT, LANDSCAPE ARCHITECT OR LAND SURVEYOR TO ALTER AN ITEM IN ANY WAY. IF AN ITEM BEARING THE STAMP OF A LICENSED PROFESSIONAL IS ALTERED, THE ALTERING ENGINEER, ARCHITECT, LANDSCAPE ARCHITECT OR LAND SURVEYOR SHALL STAMP THE DOCUMENT AND INCLUDE THE NOTATION "ALTERED BY" FOLLOWED BY THEIR SIGNATURE, THE DATE OF SUCH ALTERATION, AND A SPECIFIC DESCRIPTION OF THE ALTERATION.

UNIVERSITY OF HARTFORD ATHLETIC SPORTS COMPLEX

No.	Submittal / Revision	App'd	By	Date

DOOR AND ROOM SCHEDULES & DETAILS

Designed By:	Drawn By:	Checked By:
KDL	VR	KRA
Issue Date:	Project No:	Scale:
1/13/2023	059815	AS SHOWN

Drawing No:
A-601

Central File: Update this text with Central file location
Saved: 1/13/2023 2:46:48 PM Current Local File: C:\Users\6448\Documents\059815 - ARCH22 - CENTRAL_amojahed5XJSZ.rvt

LIFE SAFETY SYMBOL KEY

Symbol	Meaning
←- - -→	PATH OF TRAVEL
FE	FIRE EXTINGUISHER - WALL MOUNTED
WP	REMOTE EMERGENCY LIGHT
⊗	EXIT/EMERGENCY SIGN

EXIT CAPACITY
LOAD FACTOR
EXIT COMPONENT

	EXIT COMPONENT	LOAD FACTOR	EXIT CAPACITY
D1	DOOR	.20	160
S1	STAIR	.08	700
S2	STAIR	.08	675
S3	STAIR	.08	850
A1	AISLE	.08	738
R1	RAMP	0.066	939

AREA	OCCUPANT LOAD	EXIT CAPACITY
GRANDSTAND	289 PERSONS	1,639 PERSONS
PRESS BOX	39 PERSONS	320 PERSONS

GRANDSTAND GENERAL NOTES

THE GRANDSTAND MANUFACTURER IS RESPONSIBLE FOR:

1	THE GRANDSTAND UNDERSTRUCTURE INCLUDING VERTICAL AND HORIZONTAL SUPPORT MEMBERS AND CROSS-BRACING
2	THE DESIGN OF ALL ASSOCIATED CONCRETE FOUNDATION AND CONCRETE FOOTING WORK REQUIRED
3	ALL GRANDSTAND GUARD AND HANDRAILS
4	ALUMINUM DECKING, SEAT BOARDS, AND RISER CLOSURE PLATES
5	VERTICAL AISLE STEPS AND MID-AISLE RAILINGS
6	CLOSURE PLATES AND RAILING AT ACCESSIBLE SEATING CUT-OUTS
7	FRONT AISLE WALKWAY SURFACE SYSTEM AND ALL ASSOCIATED GUARD AND HANDRAILS AND SKIRTING CLOSURE
8	THE DESIGN OF AT GRADE FLUSH CONCRETE PADS/LANDINGS FOR THE STAIRS AND RAMPS (TO BE INSTALLED BY OTHERS)
9	THE GRANDSTAND SHALL CONFORM TO THE ICC-300-17 AND ALL OTHER APPLICABLE CODES AND REGULATIONS (FEDERAL/STATE/LOCAL)
10	VERIFY ALL STAIRS AND RAMPS WITH FINAL GRADING - REFER TO CIVIL DRAWINGS

PRESS BOX GENERAL NOTES

THE GRANDSTAND MANUFACTURER IS RESPONSIBLE FOR:

1	THE PRESS BOX MANUFACTURER SHALL PROVIDE THE PRESS BOX SUPERSTRUCTURE
2	THE LIGHT GAUGE STEEL FRAMING FOR THE RAISED FLOOR, ROOF AND WALLS WILL BE BY THE PRESS BOX MANUFACTURER
3	THE PRESS BOX MANUFACTURER IS RESPONSIBLE FOR ALL INTERIOR FINISHES, WINDOWS, DOORS AND MILLWORK
4	THE PRESS BOX MANUFACTURER IS RESPONSIBLE FOR ROOFTOP FILMING ACCESS INCLUDING HATCH, GUARDRAILS, AND ACCESS STAIR.
5	THE PRESS BOX MANUFACTURER IS RESPONSIBLE FOR ALL ELECTRICAL AND MECHANICAL SYSTEMS

SEATING PLAN

3/16"=1'-0"

ROWS 5		ELEVATION 40"	
RISE 8		RUN 24	
DECK SYSTEM – CLOSED			
DECK FINISH – MILL			
BENCH SEATING CAPACITY			282
CHAIR SEATING CAPACITY			0
WHEELCHAIR SEATING CAPACITY			5
COMPANION SEATING CAPACITY			2
TOTAL SEATING CAPACITY			289

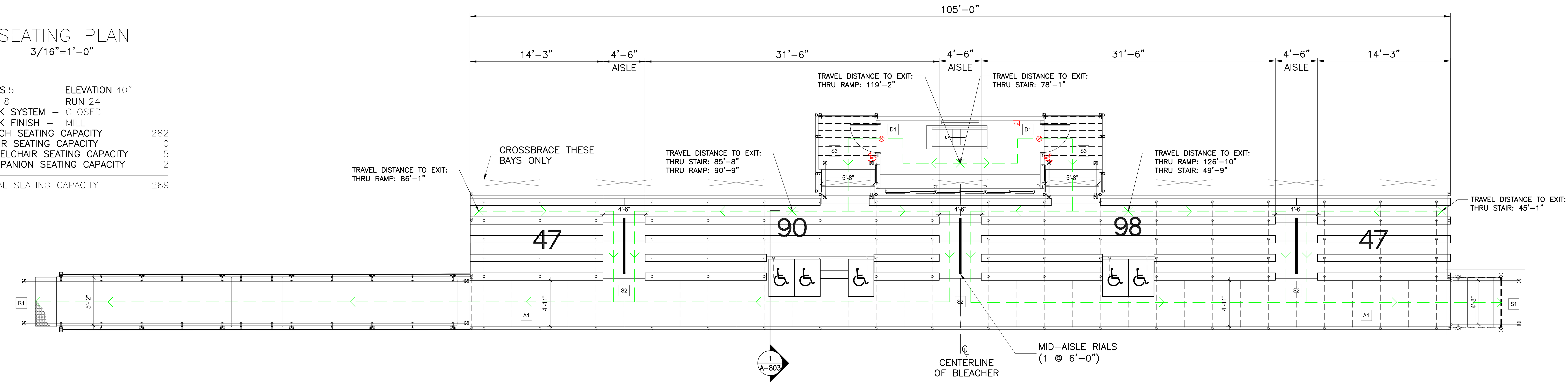

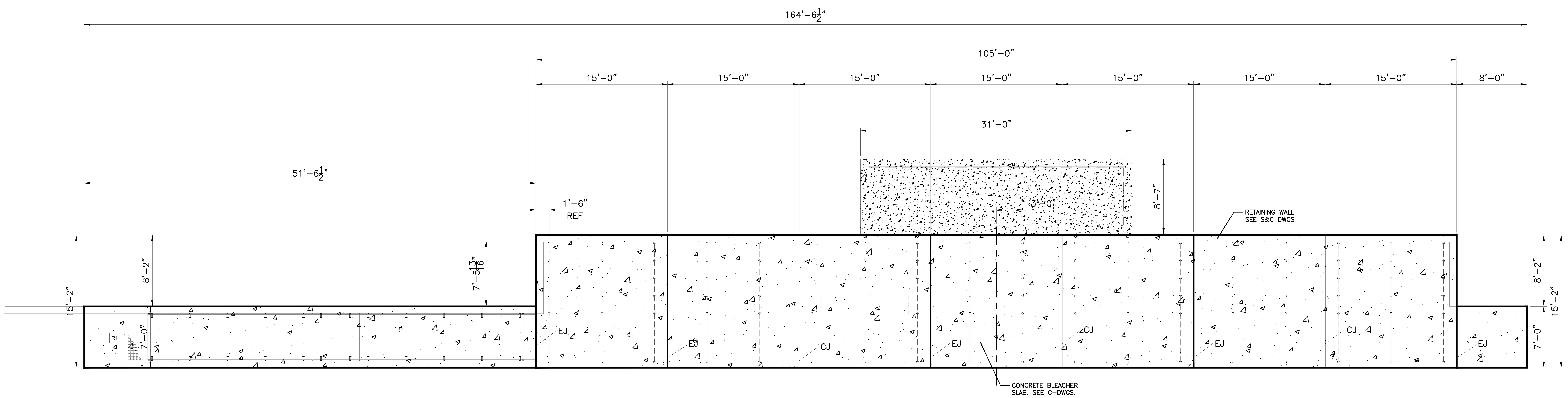

THIS ENTIRE SHEET IS PART OF THE ALTERNATE ITEM

Drawing Copyright © 2023

CHA
200 Corporate Place, Suite 110
Rocky Hill, CT 06067-1863
860.257.4557 · www.chacompanies.com

University of Hartford

IT IS A VIOLATION OF LAW FOR ANY PERSON, UNLESS THEY ARE ACTING UNDER THE DIRECTION OF A LICENSED PROFESSIONAL ENGINEER, ARCHITECT, LANDSCAPE ARCHITECT OR LAND SURVEYOR TO ALTER AN ITEM IN ANY WAY. IF AN ITEM BEARING THE STAMP OF A LICENSED PROFESSIONAL IS ALTERED, THE ALTERING ENGINEER, ARCHITECT, LANDSCAPE ARCHITECT OR LAND SURVEYOR SHALL STAMP THE DOCUMENT AND INCLUDE THE NOTATION "ALTERED BY" FOLLOWED BY THEIR SIGNATURE, THE DATE OF SUCH ALTERATION, AND A SPECIFIC DESCRIPTION OF THE ALTERATION.

UNIVERSITY OF HARTFORD
ATHLETIC SPORTS COMPLEX
200 BLOOMFIELD AVE, WEST
HARTFORD, CT 06117

No.	Submittal / Revision	App'd.	By	Date

GRANDSTAND
PLANS & DETAILS

Designed By:	Drawn By:	Checked By:
KDL	AM	KRA
Issue Date:	Project No:	Scale:
1/13/2023	59815	AS SHOWN

Drawing No.:
A-801

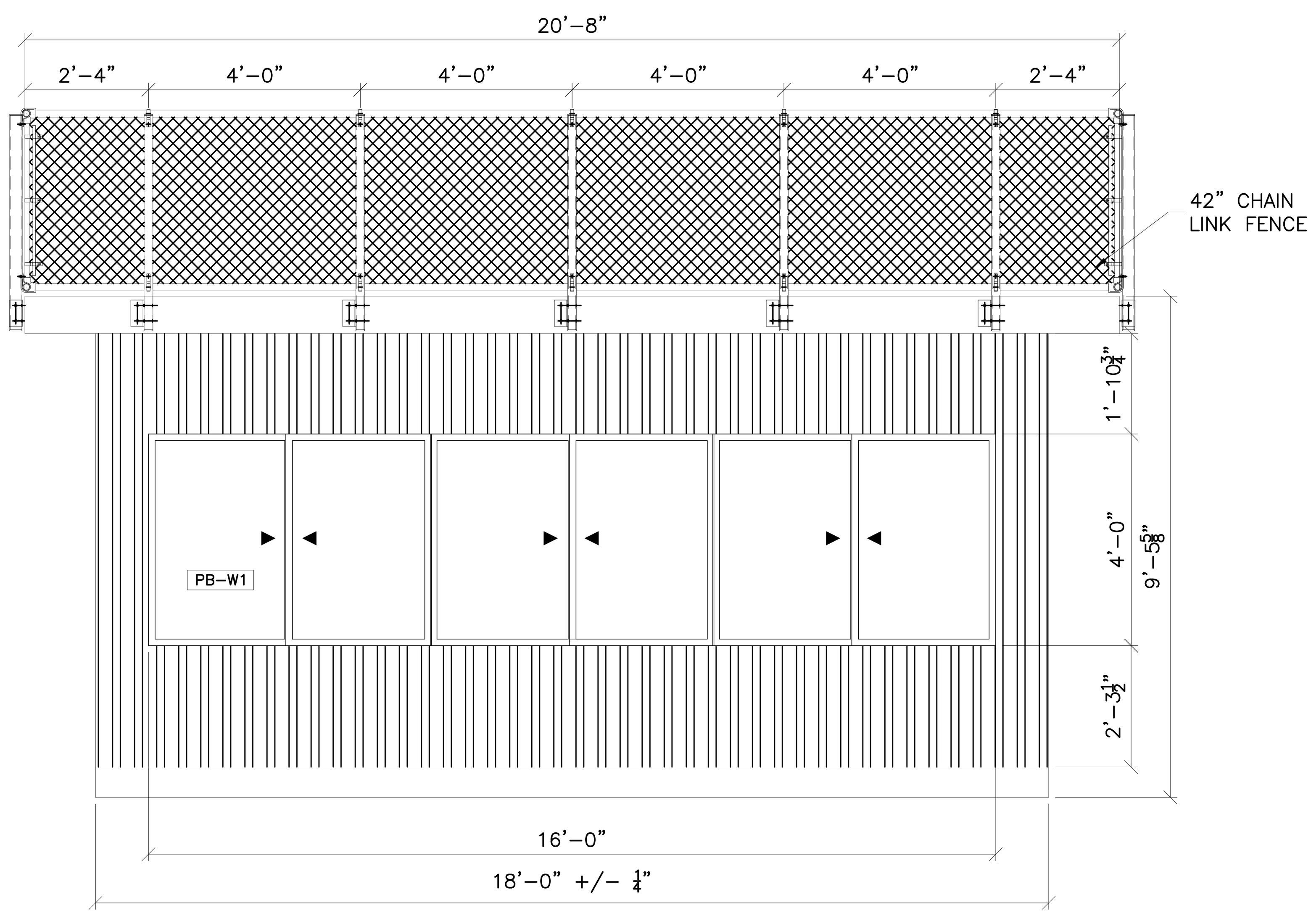

1 A-802 PRESS BOX FRONT ELEVATION
SCALE: 1/2" = 1'-0"

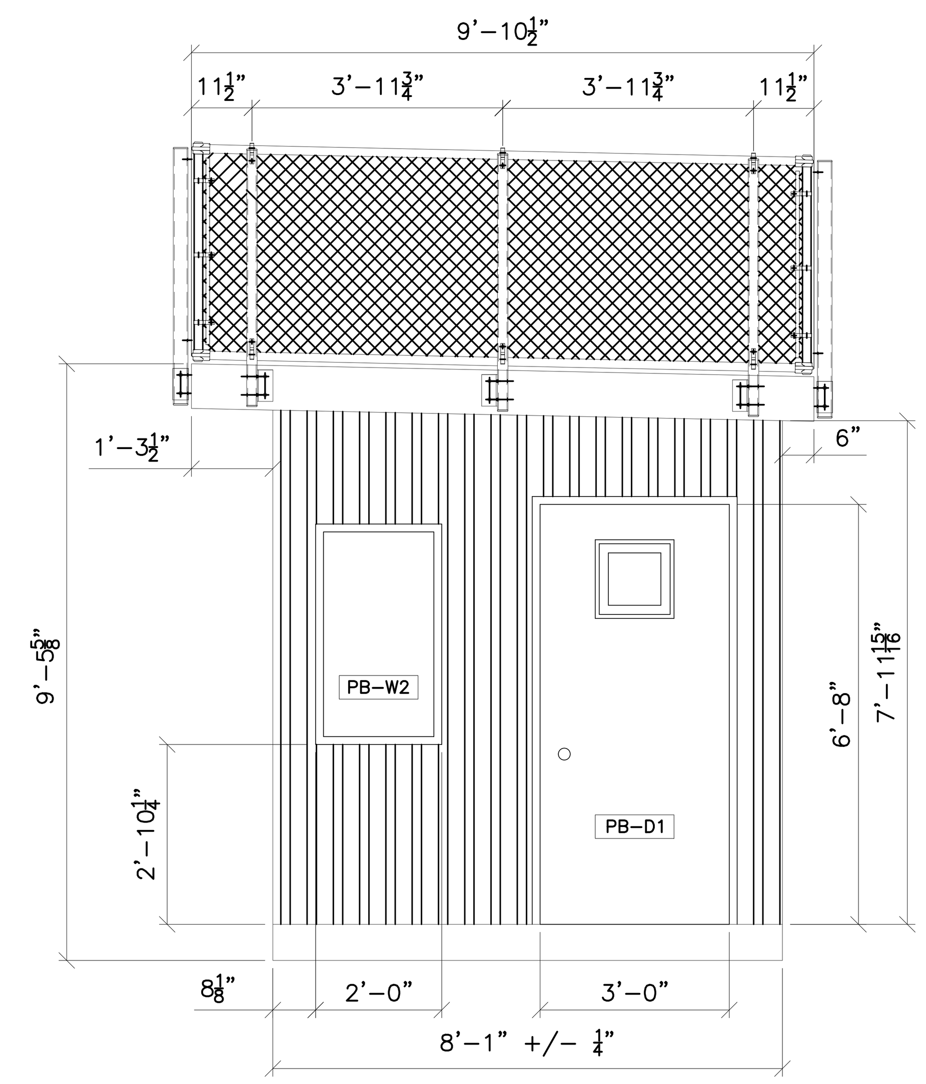

2 A-802 PRESS BOX SIDE ELEVATION
SCALE: 1/2" = 1'-0"

DOOR SCHEDULE

DOOR						FRAME	
KEY	WIDTH	HEIGHT	THICKNESS	TYPE	MATERIAL	MATERIAL	FIRE RATING
PB-D1	3'-0"	6'-8"	0'-1¾"	3	STEEL	STEEL	

PB-D1 – 18 GA. INSULATED HOLLOW METAL DOOR WITH 16 GA. STEEL WRAP AROUND FRAMES, VIEWING WINDOW, VINYL WEATHER-STRIPPING, ALUMINUM THRESHOLD AND LEVER HANDLED LOCK SETS.

WINDOW SCHEDULE

KEY	WIDTH	HEIGHT	TYPE	FRAME	U-FACTOR	SHGC
PB-W1	16'-0"	4'-0"	DOUBLE SLIDER	VINYL	.29	.29
PB-W2	2'-0⅝"	3'-6"	GLASS ONLY	N/A	N/A	N/A

PB-W1 – SOFT-LITE "BARRINGTON DSL7 HS", DOUBLE HORIZONTAL SLIDER WINDOWS W/ EXTRUDED VINYL FRAMES, AAMA STRUCTURAL RATING, W/ ⅞" INSULATED LOW-E, ARGON FILLED TEMPERED GLASS W/ REMOVABLE INSECT SCREENS. NATURAL LIGHT ALLOWED = 64 SQ/FT, VENTABLE AREA = 32 SQ/FT

PB-W2 – TEMPERED SAFETY GLASS WINDOW. INSERTED INTO PARTITION WALLS AT SAME HEIGHT AS HEADER.

*NOTE – GLAZING DESIGN PRESSURE = 22 PSF MINIMUM
WINDOWS INSTALLED PER MANUFACTURERS INSTALLATION DETAILS

GRANDSTAND GENERAL NOTES

THE GRANDSTAND MANUFACTURER IS RESPONSIBLE FOR:

1	THE GRANDSTAND UNDERSTRUCTURE INCLUDING VERTICAL AND HORIZONTAL SUPPORT MEMBERS AND CROSS-BRACING
2	THE DESIGN OF ALL ASSOCIATED CONCRETE FOUNDATION AND CONCRETE FOOTING WORK REQUIRED
3	ALL GRANDSTAND GUARD AND HANDRAILS
4	ALUMINUM DECKING, SEAT BOARDS, AND RISER CLOSURE PLATES
5	VERTICAL AISLE STEPS AND MID-AISLE RAILINGS
6	CLOSURE PLATES AND RAILING AT ACCESSIBLE SEATING CUT-OUTS
7	FRONT AISLE WALKWAY SURFACE SYSTEM AND ALL ASSOCIATED GUARD AND HANDRAILS AND SKIRTING CLOSURE
8	THE DESIGN OF AT GRADE FLUSH CONCRETE PADS/LANDINGS FOR THE STAIRS AND RAMPS (TO BE INSTALLED BY OTHERS)
9	THE GRANDSTAND SHALL CONFORM TO THE ICC-300-17 AND ALL OTHER APPLICABLE CODES AND REGULATIONS (FEDERAL/STATE/LOCAL)
10	VERIFY ALL STAIRS AND RAMPS WITH FINAL GRADING - REFER TO CIVIL DRAWINGS

PRESS BOX GENERAL NOTES

THE GRANDSTAND MANUFACTURER IS RESPONSIBLE FOR:

1	THE PRESS BOX MANUFACTURER SHALL PROVIDE THE PRESS BOX SUPERSTRUCTURE
2	THE LIGHT GAUGE STEEL FRAMING FOR THE RAISED FLOOR, ROOF AND WALLS WILL BE BY THE PRESS BOX MANUFACTURER
3	THE PRESS BOX MANUFACTURER IS RESPONSIBLE FOR ALL INTERIOR FINISHES, WINDOWS, DOORS AND MILLWORK
4	THE PRESS BOX MANUFACTURER IS RESPONSIBLE FOR ROOFTOP FILMING ACCESS INCLUDING HATCH, GUARDRAILS, AND ACCESS STAIR.
5	THE PRESS BOX MANUFACTURER IS RESPONSIBLE FOR ALL ELECTRICAL AND MECHANICAL SYSTEMS

THIS ENTIRE SHEET IS PART OF THE ALTERNATE ITEM

Drawing Copyright © 2023

CHA
200 Corporate Place, Suite 110
Rocky Hill, CT 06067-1861
860.257.4557 . www.chacompanies.com

University of Hartford

IT IS A VIOLATION OF LAW FOR ANY PERSON, UNLESS THEY ARE ACTING UNDER THE DIRECTION OF A LICENSED PROFESSIONAL ENGINEER, ARCHITECT, LANDSCAPE ARCHITECT OR LAND SURVEYOR TO ALTER AN ITEM IN ANY WAY. IF AN ITEM BEARING THE STAMP OF A LICENSED PROFESSIONAL IS ALTERED, THE ALTERING ENGINEER, ARCHITECT, LANDSCAPE ARCHITECT OR LAND SURVEYOR SHALL STAMP THE DOCUMENT AND INCLUDE THE NOTATION "ALTERED BY" FOLLOWED BY THEIR SIGNATURE, THE DATE OF SUCH ALTERATION, AND A SPECIFIC DESCRIPTION OF THE ALTERATION.

UNIVERSITY OF HARTFORD
ATHLETIC SPORTS COMPLEX
200 BLOOMFIELD AVE, WEST HARTFORD, CT 06117

No.	Submittal / Revision	App'd.	By	Date

PRESS BOX ELEVATIONS

Designed By:	Drawn By:	Checked By:
KDL	AM	KRA
Issue Date:	Project No:	Scale:
1/13/2023	59815	AS SHOWN

Drawing No.:
A-802

ROOFING SYSTEM

DECKING .060 POLYESTER REINFORCED SKID AND SPIKE
RESISTANT PVC MEMBRANE FULLY ADHERED
$\frac{3}{4}$" T&G ORIENTED STRAND BOARD ROOF DECK SHEATHING (INDEX 24" O.C.)
2X8 TRANSVERSE ROOF JOIST SYSTEM, #2 SYP, 16" O.C.
R–30 2" ISOBOARD FOAM INSULATION W/ VAPOR BARRIER
TRIPLE LAYERED TO ACHIEVE R–VALUE
$\frac{5}{8}$" TYPE–X FIRE RATED GYPSUM CEILING BOARD, CLASS A RATED
–TAPED AND BEDDED WITH SPRAY TEXTURED FINISH
MASTIC FASCIA AND PERFORATED SOFFIT
(CONTINUOUS AROUND PERIMETER)

ROOF IS NOT OCCUPIED BY THE PUBLIC IT IS FOR OFFICIAL USE ONLY

SHIPS LADDER IS FOR ACCESS TO NON–OCCUPIABLE SPACE

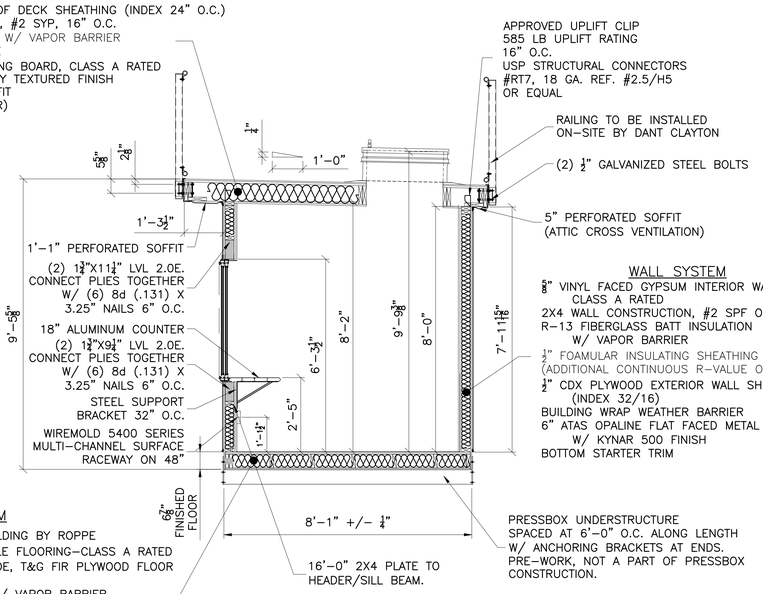

WALL SYSTEM

$\frac{5}{8}$" VINYL FACED GYPSUM INTERIOR WALL PANELS
CLASS A RATED
2X4 WALL CONSTRUCTION, #2 SPF OR BETTER, 16" O.C.
R–13 FIBERGLASS BATT INSULATION
W/ VAPOR BARRIER
$\frac{1}{2}$" FOAMULAR INSULATING SHEATHING
(ADDITIONAL CONTINUOUS R–VALUE OF R–3)
$\frac{1}{2}$" CDX PLYWOOD EXTERIOR WALL SHEATHING
(INDEX 32/16)
BUILDING WRAP WEATHER BARRIER
6" ATAS OPALINE FLAT FACED METAL PANEL
W/ KYNAR 500 FINISH
BOTTOM STARTER TRIM

PRESSBOX UNDERSTRUCTURE
SPACED AT 6'–0" O.C. ALONG LENGTH
W/ ANCHORING BRACKETS AT ENDS.
PRE–WORK, NOT A PART OF PRESSBOX
CONSTRUCTION.

FLOORING SYSTEM

4" THERMOPLASTIC RUBBER BASE MOLDING BY ROPPE
$\frac{1}{8}$" ARMSTRONG VINYL COMPOSITION TILE FLOORING–CLASS A RATED
$\frac{23}{32}$" STURDIFLOOR, UNDERLAYMENT GRADE, T&G FIR PLYWOOD FLOOR
DECKING (INDEX 24" O.C.)
R–19 FIBERGLASS BATT INSULATION W/ VAPOR BARRIER
2X6 LONGITUDINAL FLOOR CONSTRUCTION, #2 SYP. ,16" O.C.
(SPLICED 16'–0" O.C. AND STAGGERED
$\frac{1}{2}$" PLYWOOD UNDERBELLY (INDEX 32/16) W/
CONTINUOUS VENT 96" O.C. (MIN. 2)
(PAINTED INUSTRIAL GRADE ASPHALT BASED BLACK)

1 / A-802 PRESS BOX SECTION
SCALE: 1/2" = 1'-0"
0 1' 2' 4'

GRANDSTAND GENERAL NOTES

THE GRANDSTAND MANUFACTURER IS RESPONSIBLE FOR:

1	THE GRANDSTAND UNDERSTRUCTURE INCLUDING VERTICAL AND HORIZONTAL SUPPORT MEMBERS AND CROSS-BRACING
2	THE DESIGN OF ALL ASSOCIATED CONCRETE FOUNDATION AND CONCRETE FOOTING WORK REQUIRED
3	ALL GRANDSTAND GUARD AND HANDRAILS
4	ALUMINUM DECKING, SEAT BOARDS, AND RISER CLOSURE PLATES
5	VERTICAL AISLE STEPS AND MID-AISLE RAILINGS
6	CLOSURE PLATES AND RAILING AT ACCESSIBLE SEATING CUT-OUTS
7	FRONT AISLE WALKWAY SURFACE SYSTEM AND ALL ASSOCIATED GUARD AND HANDRAILS AND SKIRTING CLOSURE
8	THE DESIGN OF AT GRADE FLUSH CONCRETE PADS/LANDINGS FOR THE STAIRS AND RAMPS (TO BE INSTALLED BY OTHERS)
9	THE GRANDSTAND SHALL CONFORM TO THE ICC-300-17 AND ALL OTHER APPLICABLE CODES AND REGULATIONS (FEDERAL/STATE/LOCAL)
10	VERIFY ALL STAIRS AND RAMPS WITH FINAL GRADING - REFER TO CIVIL DRAWINGS

PRESS BOX GENERAL NOTES

THE GRANDSTAND MANUFACTURER IS RESPONSIBLE FOR:

1	THE PRESS BOX MANUFACTURER SHALL PROVIDE THE PRESS BOX SUPERSTRUCTURE
2	THE LIGHT GAUGE STEEL FRAMING FOR THE RAISED FLOOR, ROOF AND WALLS WILL BE BY THE PRESS BOX MANUFACTURER
3	THE PRESS BOX MANUFACTURER IS RESPONSIBLE FOR ALL INTERIOR FINISHES, WINDOWS, DOORS AND MILLWORK
4	THE PRESS BOX MANUFACTURER IS RESPONSIBLE FOR ROOFTOP FILMING ACCESS INCLUDING HATCH, GUARDRAILS, AND ACCESS STAIR.
5	THE PRESS BOX MANUFACTURER IS RESPONSIBLE FOR ALL ELECTRICAL AND MECHANICAL SYSTEMS

CROSSBRACE

A. CROSSBRACE = 77 1/8"
C. CROSSBRACE = 88"

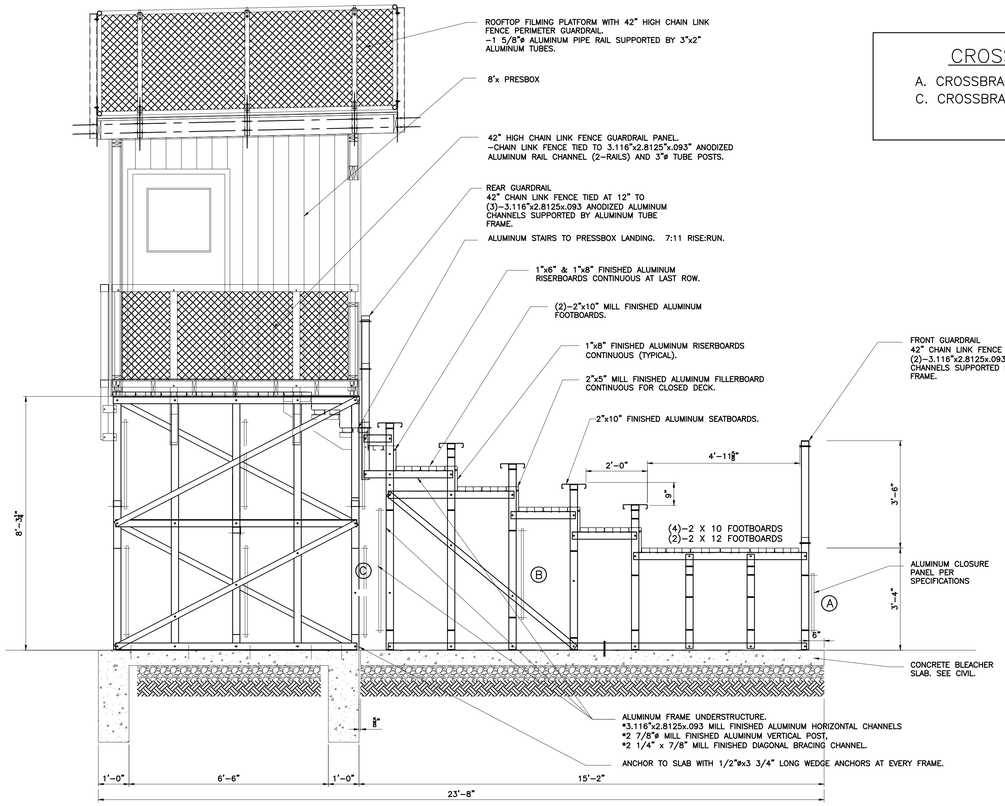

1 / A-803 GRANDSTAND SECTION
SCALE: 1/2" = 1'-0"
0 1' 2' 4'

THIS ENTIRE SHEET IS PART OF THE ALTERNATE ITEM

Drawing Copyright © 2023

CHA
390 Corporate Place, Suite 110
Rocky Hill, CT 06067-1861
860.257.8537 www.chacompanies.com

University of Hartford

IT IS A VIOLATION OF LAW FOR ANY PERSON, UNLESS THEY ARE ACTING UNDER THE DIRECTION OF A LICENSED PROFESSIONAL ENGINEER, ARCHITECT, LANDSCAPE ARCHITECT OR LAND SURVEYOR, TO ALTER THIS DOCUMENT IN ANY WAY. IF LICENSED, THE STAMP OF A LICENSED PROFESSIONAL ENGINEER, ARCHITECT, LANDSCAPE ARCHITECT OR LAND SURVEYOR SHALL STAMP THE DOCUMENT AND INCLUDE THE NOTATION "ALTERED BY" FOLLOWED BY THEIR SIGNATURE, THE DATE OF SUCH ALTERATION, AND A SPECIFIC DESCRIPTION OF THE ALTERATION.

UNIVERSITY OF HARTFORD
ATHLETIC SPORTS COMPLEX
200 BLOOMFIELD AVE, WEST
HARTFORD, CT 06117

No.	Submittal / Revision	App'd.	By	Date

GRANDSTAND & PRESS BOX SECTIONS

Designed By:	Drawn By:	Checked By:
KDL	AM	KRA
Issue Date:	Project No:	Scale:
1/13/2023	59815	AS SHOWN

Drawing No.:
A-803

File: V:\PROJECTS\ANY\K6\D59815.000\09_DESIGN\DRAWINGS\01_SHEETS\A-803 GRANDSTAND SECTION.DWG
Sheet: 1/13/2023 10:55:41 AM Protract: 1/13/2023 11:20:31 AM Current User: Mojahed, Amirali (adfsuser@b) 8446

GRANDSTAND GENERAL NOTES

THE GRANDSTAND MANUFACTURER IS RESPONSIBLE FOR:

1	THE GRANDSTAND UNDERSTRUCTURE INCLUDING VERTICAL AND HORIZONTAL SUPPORT MEMBERS AND CROSS-BRACING
2	THE DESIGN OF ALL ASSOCIATED CONCRETE FOUNDATION AND CONCRETE FOOTING WORK REQUIRED
3	ALL GRANDSTAND GUARD AND HANDRAILS
4	ALUMINUM DECKING, SEAT BOARDS, AND RISER CLOSURE PLATES
5	VERTICAL AISLE STEPS AND MID-AISLE RAILINGS
6	CLOSURE PLATES AND RAILING AT ACCESSIBLE SEATING CUT-OUTS
7	FRONT AISLE WALKWAY SURFACE SYSTEM AND ALL ASSOCIATED GUARD AND HANDRAILS AND SKIRTING CLOSURE
8	THE DESIGN OF AT GRADE FLUSH CONCRETE PADS/LANDINGS FOR THE STAIRS AND RAMPS (TO BE INSTALLED BY OTHERS)
9	THE GRANDSTAND SHALL CONFORM TO THE ICC-300-17 AND ALL OTHER APPLICABLE CODES AND REGULATIONS (FEDERAL/STATE/LOCAL)
10	VERIFY ALL STAIRS AND RAMPS WITH FINAL GRADING - REFER TO CIVIL DRAWINGS

PRESS BOX GENERAL NOTES

THE GRANDSTAND MANUFACTURER IS RESPONSIBLE FOR:

1	THE PRESS BOX MANUFACTURER SHALL PROVIDE THE PRESS BOX SUPERSTRUCTURE
2	THE LIGHT GAUGE STEEL FRAMING FOR THE RAISED FLOOR, ROOF AND WALLS WILL BE BY THE PRESS BOX MANUFACTURER
3	THE PRESS BOX MANUFACTURER IS RESPONSIBLE FOR ALL INTERIOR FINISHES, WINDOWS, DOORS AND MILLWORK
4	THE PRESS BOX MANUFACTURER IS RESPONSIBLE FOR ROOFTOP FILMING ACCESS INCLUDING HATCH, GUARDRAILS, AND ACCESS STAIR.
5	THE PRESS BOX MANUFACTURER IS RESPONSIBLE FOR ALL ELECTRICAL AND MECHANICAL SYSTEMS

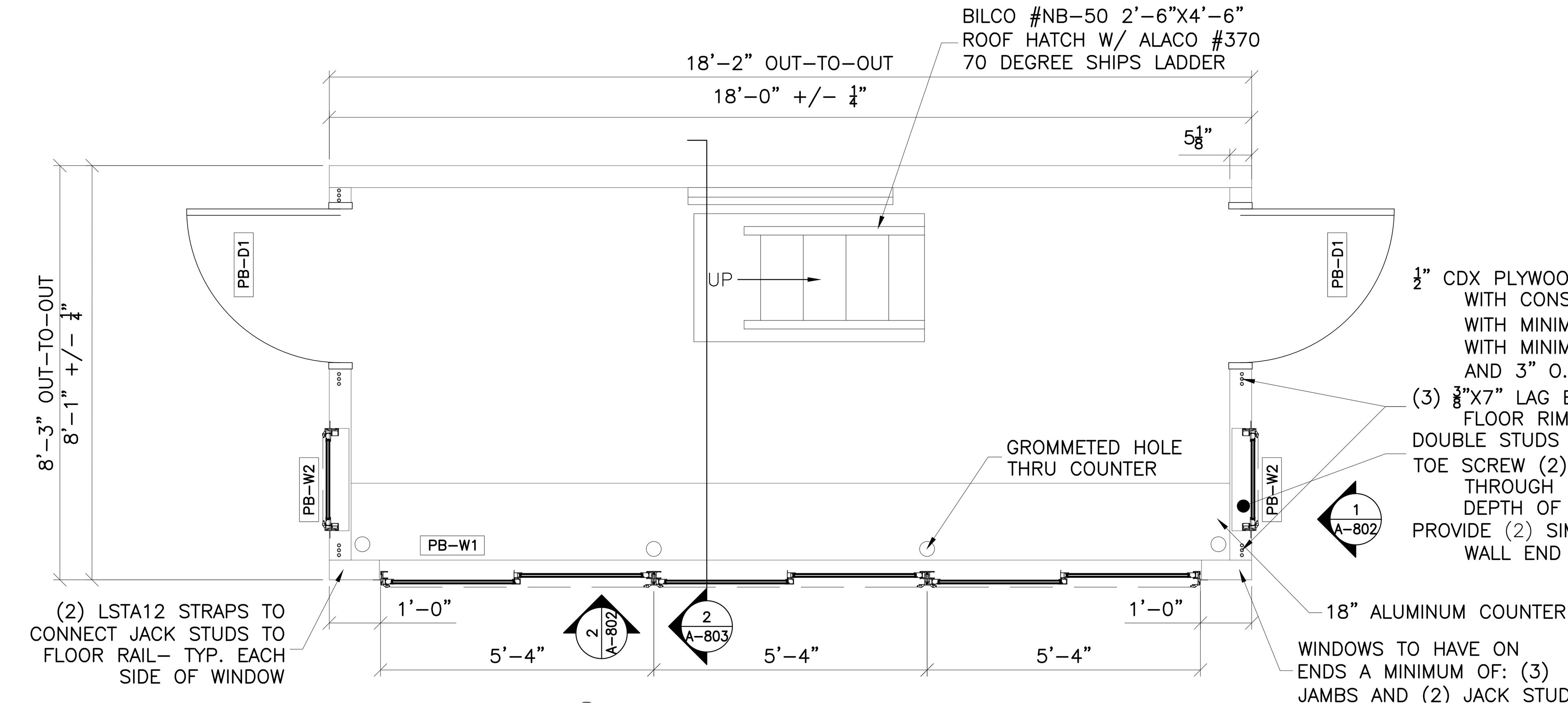

SHEAR WALL SYSTEM

$\frac{1}{2}$" CDX PLYWOOD WALL SHEATHING GLUED WITH CONSTRUCTION ADHESIVE AND STAPLED WITH MINIMUM 16 GA. X $\frac{7}{16}$" CROWN STAPLES WITH MINIMUM 1" PENETRATION, 5" O.C. FIELD AND 3" O.C. EDGES (SUPPORTED).
(3) $\frac{3}{8}$"X7" LAG BOLT EA. CORNER OF SHEAR WALL FLOOR RIM JOISTS. TYP. BOTH ENDS.
DOUBLE STUDS EACH END OF SHEAR WALL.
TOE SCREW (2) #10 X 3$\frac{1}{2}$" WOOD SCREWS THROUGH EACH STUD AND INTO THE FULL DEPTH OF THE BOTTOM PLATE.
PROVIDE (2) SIMPSON LSTA12 TO CONNECT SHEAR WALL END STUDS TO FLOOR RAILS.

1 A-804 PRESS BOX PLAN
SCALE: 1/2" = 1'-0"
0 1' 2' 4'

SYMBOL	DESCRIPTION
	5/8" TYPE-X GYP CEILING
	(2) 4' LINEAR LED LIGHT WITH PARABOLIC DIFFUSERS (17 WATT)
EX-1	MORRIS SQUARE HEAD LED COMBO EXIT/EMERGENCY LIGHT. PRODUCT #73442
WP EL-1	LITHONIA #ELA-W-NX-N0806 REMOTE EMERGENCY LIGHT HEAD
WP EL-2	180-DEGREE WHITE OUTDOOR LED MOTION SECURITY LIGHT W/ DUSK TO DAWN SENSOR #DFI-5982-WH WALL MOUNTED ABOVE THE CENTER OF THE DOOR.

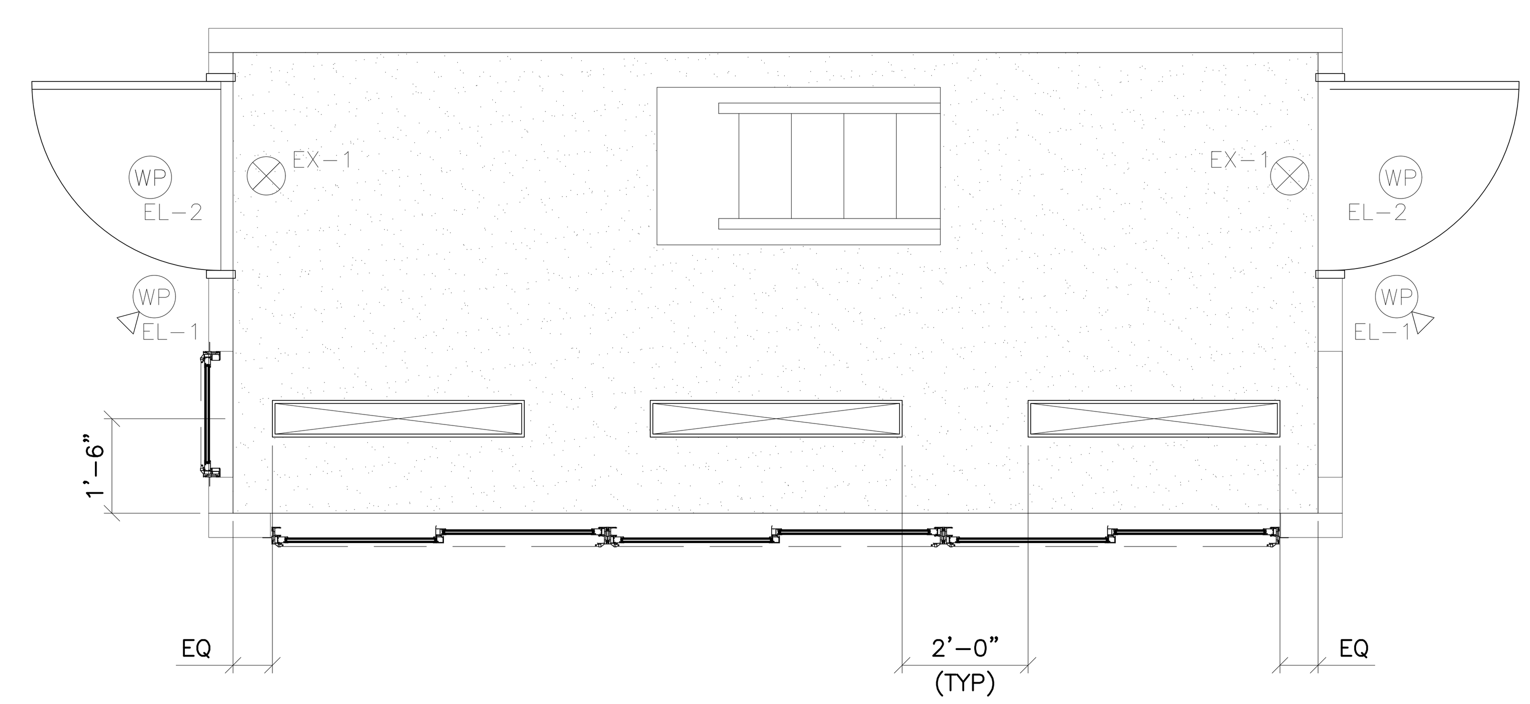

2 A-804 PRESS BOX REFLECTED CEILING PLAN
SCALE: 1/2" = 1'-0"
0 1' 2' 4'

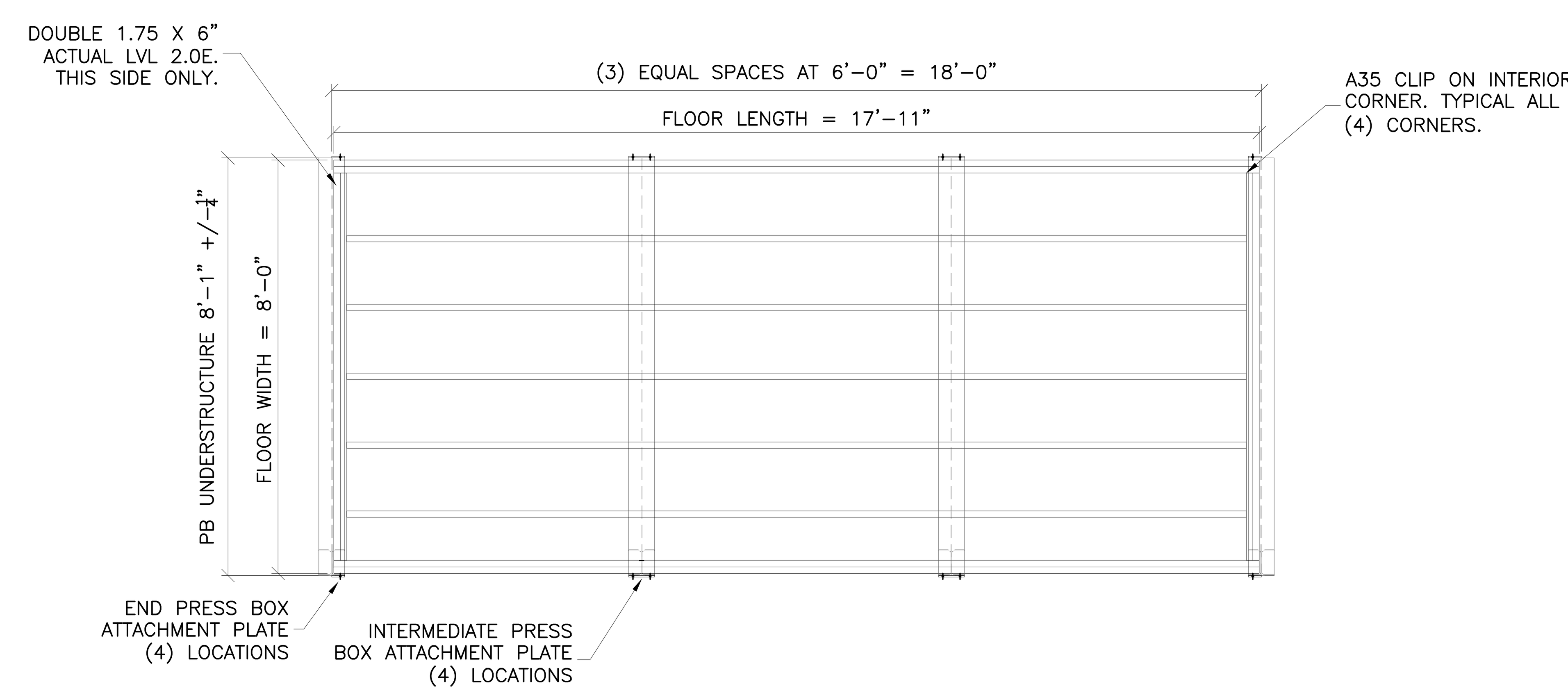

3 A-804 PRESS BOX FRAMING PLAN
SCALE: 1/2" = 1'-0"
0 1' 2' 4'

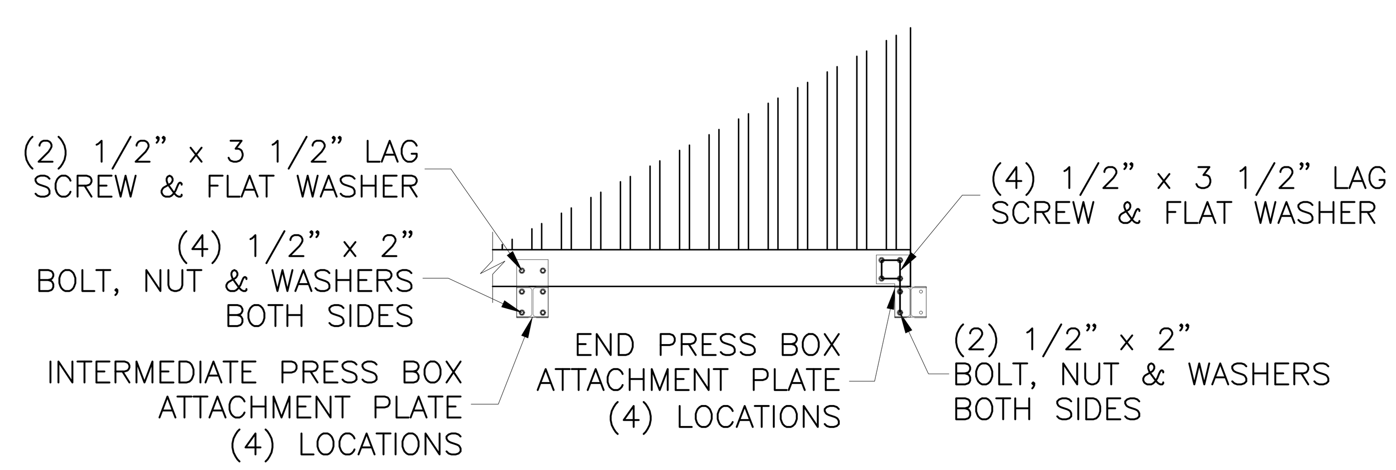

4 A-804 PRESS BOX ATTACHMENT DETAIL
SCALE: 1/2" = 1'-0"
0 1' 2' 4'

THIS ENTIRE SHEET IS PART OF THE ALTERNATE ITEM

File: V:\PROJECTS\ANY\K6\059815.000\09_DESIGN\DRAWINGS\01_SHEETS\A-804 ENLARGED PRESS BOX PLANS.DWG
Saved: 1/13/2023 11:11:25 AM Plotted: 1/13/2023 11:21:05 AM Current User: Mojahed, Amirali LastSavedBy: 6446

Drawing Copyright © 2023

CHA
200 Corporate Place, Suite 110
Rocky Hill, CT 06067-1861
860.257.4557 . www.chacompanies.com

University of Hartford

IT IS A VIOLATION OF LAW FOR ANY PERSON, UNLESS THEY ARE ACTING UNDER THE DIRECTION OF A LICENSED PROFESSIONAL ENGINEER, ARCHITECT, LANDSCAPE ARCHITECT OR LAND SURVEYOR TO ALTER AN ITEM IN ANY WAY. IF AN ITEM BEARING THE STAMP OF A LICENSED PROFESSIONAL IS ALTERED, THE ALTERING ENGINEER, ARCHITECT, LANDSCAPE ARCHITECT OR LAND SURVEYOR SHALL STAMP THE DOCUMENT AND INCLUDE THE NOTATION "ALTERED BY" FOLLOWED BY THEIR SIGNATURE, THE DATE OF SUCH ALTERATION, AND A SPECIFIC DESCRIPTION OF THE ALTERATION.

UNIVERSITY OF HARTFORD ATHLETIC SPORTS COMPLEX
200 BLOOMFIELD AVE, WEST HARTFORD, CT 06117

No.	Submittal / Revision	App'd.	By	Date

ENLARGED PRESS BOX PLANS

Designed By:	Drawn By:	Checked By:
KDL	AM	KRA
Issue Date:	Project No:	Scale:
1/13/2023	59815	AS SHOWN

Drawing No.:
A-804

GENERAL NOTES

1. THESE DRAWINGS ESTABLISH A PERFORMANCE SPECIFICATION. PROVIDE ALL LABOR, MATERIALS, EQUIPMENT, AND SERVICES REQUIRED TO EXECUTE AND COMPLETE ALL ITEMS OF WORK AS SHOWN OR INDICATED ON THESE DRAWINGS.
2. THE DESIGN IS BASED ON THE 2018 EDITION OF THE CONNECTICUT STATE BUILDING CODE.
3. DIMENSIONS TO, OF, AND IN EXISTING STRUCTURES INDICATE EXISTING CONDITIONS AS KNOWN AND SHALL BE VERIFIED IN THE FIELD BY THE CONTRACTOR. ALL DISCREPANCIES SHALL BE REPORTED TO THE ENGINEER AND APPROVED PRIOR TO THE START OF CONSTRUCTION.
4. DO NOT CHANGE THE SIZE OR SPACING OF STRUCTURAL ELEMENTS WITHOUT PRIOR APPROVAL OF THE ENGINEER.
5. DETAILS SHOWN ARE TYPICAL; SIMILAR DETAILS APPLY TO SIMILAR CONDITIONS UNLESS OTHERWISE INDICATED.
6. THESE DRAWINGS DO NOT INCLUDE NECESSARY COMPONENTS FOR CONSTRUCTION SAFETY. THE CONTRACTOR SHALL BE SOLELY RESPONSIBLE FOR CONSTRUCTION SAFETY.
7. THE DESIGN, ADEQUACY, AND SAFETY OF BRACING, SHORING, OR TEMPORARY SUPPORTS REQUIRED TO MAINTAIN STRUCTURAL STABILITY AND SUPPORT CONSTRUCTION LOADS WHICH ARE NOT SPECIFICALLY DETAILED ON THESE DRAWINGS IS THE SOLE RESPONSIBILITY OF THE CONTRACTOR.
8. THE CONTRACTOR SHALL MONITOR THE EXISTING STRUCTURE DURING CONSTRUCTION. IMMEDIATELY NOTIFY THE ENGINEER OF AREAS EXHIBITING DISTRESS OR FAILURE.
9. THE CONTRACTOR SHALL DETERMINE THE EXACT LOCATION OF ALL EXISTING UTILITIES BEFORE COMMENCING WORK. THE CONTRACTOR AGREES TO BE FULLY RESPONSIBLE FOR ALL DAMAGES WHICH MIGHT OCCUR WITH FAILURE TO LOCATE AND PRESERVE ALL UNDERGROUND UTILITIES.
10. INCORRECTLY FABRICATED, DAMAGED, OR OTHERWISE MISFITTING OR NONCONFORMING MATERIALS OR CONDITIONS SHALL BE REPORTED TO THE OWNER'S REPRESENTATIVE PRIOR TO CORRECTIVE ACTION. ANY SUCH ACTION SHALL REQUIRE PRE-APPROVAL BY THE ENGINEER.
11. EACH CONTRACTOR SHALL COOPERATE WITH THE OWNER'S REPRESENTATIVE AND COORDINATE HIS/HER WORK WITH THE WORK OF OTHERS.
12. VERIFY THE SIZE AND LOCATION OF OPENINGS PRIOR TO BEGINNING WORK.
13. THE FRAMING HAS BEEN DESIGNED FOR THE WEIGHT OF EQUIPMENT SHOWN ON THE STRUCTURAL DRAWINGS. IF ACTUAL WEIGHT OF EQUIPMENT EXCEEDS THAT SHOWN OR IF EQUIPMENT NOT SHOWN EXCEEDS 250 POUNDS, THE CONTRACTOR SHALL IMMEDIATELY NOTIFY THE ENGINEER.

SHOP DRAWING SUBMITTALS

1. GENERAL CONTRACTOR SHALL SUBMIT SHOP DRAWINGS TO THE ENGINEER FOR REVIEW WITH ALL REQUIRED INFORMATION AS INDICATED IN THE DRAWINGS AND SPECIFICATIONS, PRIOR TO ANY FABRICATION.
2. ALL DIMENSIONS SHALL BE COORDINATED BY THE CONTRACTOR AND/OR THE DETAILER. ALL EXISTING DIMENSIONS SHALL BE FIELD VERIFIED PRIOR TO SUBMITTAL OF SHOP DRAWINGS.
3. DETAILER SHALL USE THE SAME GRID IDENTIFICATIONS AS THOSE SHOWN ON THE CONTRACT DRAWINGS.
4. ALL SHOPS SHALL BE SUBMITTED PRIOR TO PROCEEDING WITH ANY ASSOCIATED WORK AND SHALL ALLOW FOR SUFFICIENT REVIEW TIME .
5. SHOP DRAWINGS SHALL BE SUBMITTED WITH CONTRACTOR'S STAMP OF APPROVAL, CERTIFYING THE CONTRACTOR HAS COORDINATED AND VERIFIED ALL DIMENSIONS, MATERIALS, AND ANY ADDITIONAL INFORMATION AFFECTING STRUCTURAL WORK. THE CONTRACTOR'S REVIEW INCLUDES, BUT IS NOT LIMITED TO, COORDINATION AND VERIFICATION OF ACTUAL FIELD CONDITIONS, DIMENSIONS, ELEVATIONS, AND SUPPORTS AND OPENING FOR ACTUAL EQUIPMENT PURCHASED.
6. RESUBMITTED SHOP DRAWINGS SHALL INCLUDE ALL CHANGES ON THE DRAWINGS CLOUDED AND MARKED WITH REVISION TAG NUMBER.
7. CONTRACTOR SHALL NOT PROCEED WITH ANY WORK UNTIL THE SHOP DRAWINGS HAVE BEEN REVIEWED AND APPROVED BY THE ENGINEER.

FOUNDATION AND SOIL PREPARATION NOTES

1. THE FOUNDATION DESIGN IS BASED ON THE RECOMMENDATIONS IN THE GEOTECHNICAL ENGINEERING REPORT TITLED "GEOTECHNICAL ENGINEERING RECOMMENDATIONS, UNIVERSITY OF HARTFORD ATHLETIC FIELD PROJECT" BY OTOT CONNECTICUT, LLC AND DATED DECEMBER 27, 2022. BEARING STRATUM FOR FOUNDATIONS SHALL BE VERIFIED IN FIELD BY THE GEOTECHNICAL ENGINEER BEFORE PLACING CONCRETE FOOTINGS.
2. THE CONTRACTOR SHALL REVIEW THE GEOTECHNICAL REPORT AND BORING LOGS DURING THE BIDDING PHASE OF THE PROJECT.
3. BEAR ALL FOOTINGS ON COMPACTED STRUCTURAL FILL OR NATIVE UNDISTURBED SOIL WITH A MINIMUM NET ALLOWABLE BEARING PRESSURE OF 2,500 PSF, AS APPROVED BY THE GEOTECHNICAL ENGINEER.
4. BOTTOM OF ALL FOOTINGS SHALL BE A MINIMUM OF 3'-6" BELOW FINAL FINISHED GRADE. ADJUST FOOTING ELEVATIONS AS REQUIRED TO MAINTAIN MINIMUM FROST COVER.
5. SOIL BEARING SURFACES, PREVIOUSLY ACCEPTED BY THE OWNER'S REPRESENTATIVE, WHICH ARE ALLOWED TO BECOME SATURATED, FROZEN OR DISTURBED SHALL BE REWORKED TO SATISFACTION OF THE OWNER'S REPRESENTATIVE.
6. PROVIDE POSITIVE DRAINAGE FOR ALL TRENCHES DURING CONSTRUCTION. DO NOT ALLOW ANY PONDING OF WATER DURING CONSTRUCTION.
7. DO NOT PLACE FOOTINGS IN WATER OR ON FROZEN GROUND. DO NOT ALLOW GROUND BENEATH FOOTINGS TO FREEZE.
8. THE SOIL BENEATH THE BUILDING AND 5 FEET AROUND THE PERIMETER SHALL BE TREATED AS FOLLOWS:
   A. STRIP THE AREA OF ALL VEGETATION.
   B. PERFORM ALL CUT OPERATIONS.
   C. ALL EXISTING SOIL CONTAINING GRAVEL, CONSTRUCTION OR DEMOLITION DEBRIS, ORGANIC SUBSTANCES, OR OTHER FOREIGN OBJECTS AND A MINIMUM OF 2 FEET BELOW BOTTOM OF SLAB SHALL BE REMOVED FROM THE REGION WITHIN THE FOOTPRINT OF THE STRUCTURE.
   D. THE EXPOSED SUBGRADES SHOULD BE PROOF ROLLED USING A SMOOTH DRUM VIBRATORY ROLLER WITH A STATIC WEIGHT OF AT LEAST 10 TONS. THE ROLLER IN VIBRATORY MODE SHOULD COMPLETE AT LEAST SIX PASSES OVER THE SUBGRADE AT A SPEED NOT EXCEEDING 3 FEET PER SECOND. ANY AREAS WHICH PUMP OR WEEK SHOULD BE UNDERCUT BY A MINIMUM OF 12 INCHES AND STABILIZED WITH STRUCTURAL FILL.
   E. THE FILL REQUIRED TO RAISE THE BUILDING TO BENEATH THE FLOOR SLAB SHALL BE SELECT (STRUCTURAL) FILL. THE SELECT FILL SHALL HAVE A PLASTICITY INDEX BETWEEN 4 AND 12 AND A LIQUID LIMIT LESS THAN 40. PLACE ALL SELECT FILL IN 8-INCH LOOSE LIFTS AND COMPACT TO AT LEAST 95% OF THE MATERIAL'S MAXIMUM DRY DENSITY PER THE MODIFIED PROCTOR TEST.
   F. ALL SLABS-ON-GRADE SHALL BEAR ON A BASE COURSE OF CLEAN, COMPACTED CRUSHED STONE A MINIMUM OF 6" THICK. SEE PLAN FOR THE CRUSHED STONE SHALL BE A 50:50 MIX OF NO. 57 AND NO. 67 CRUSHED STONE. THE STONE SHOULD BE UNDERLAIN BY A 6 OUNCE PER SQUARE YARD OR HEAVIER, NON-WOVEN FILTER FABRIC WITH AN APPARENT OPENING SIZE OF EQUAL TO OR SMALL THAN THE US STANDARD SIEVE SIZE OF 100.
   G. EACH LIFT SHALL BE TESTED FOR MOISTURE CONTENT AND IN PLACE DENSITY AT A RATE OF ONE TEST PER 3,000 SQUARE FEET (MINIMUM OF THREE PER LIFT).
9. STRUCTURAL FILL AND SELECTED FILL: IMPORTED SOUND, DURABLE, SAND, GRAVEL, STONE, OR BLENDS OF THESE MATERIALS, FREE FROM ORGANIC, FROZEN OR OTHER DELETERIOUS MATERIALS, AND MEETING THE FOLLOWING GRADATION REQUIREMENTS:

SIEVE	PERCENT PASSING
4"	100
NO. 40	0 - 70
NO. 200	0 - 10

   A. FINES PASSING NO. 200 SHALL BE NON-PLASTIC.
   B. PARTICLE SIZE ANALYSIS SHALL SHOW **NO** GAP GRADING.
   C. EXISTING SOIL SHALL NOT BE USED AS FILL UNLESS APPROVED BY ENGINEER.

CAST-IN-PLACE CONCRETE NOTES

1. CONCRETE FOR FOUNDATIONS SHALL HAVE A 28 DAY DESIGN COMPRESSIVE STRENGTH OF 4,000 PSI, TYPE A OR D WATER REDUCING AGENT AND A 4-5" SLUMP. CONCRETE SHALL BE AIR ENTRAINED PER ACI REQUIREMENTS.
2. CONCRETE FOR EXTERIOR CAST IN PLACE SLAB-ON-GRADE SHALL HAVE A 28 DAY DESIGN COMPRESSIVE STRENGTH OF 4,500 PSI, TYPE A OR D WATER REDUCING AGENT AND A 4-5" SLUMP. CONCRETE SHALL BE AIR ENTRAINED PER ACI REQUIREMENTS. FLY ASH SHALL NOT BE USED WITHOUT THE APPROVAL OF THE ENGINEER BEFORE BIDDING
3. CONCRETE FOR INTERIOR CAST IN PLACE FLOOR SLAB SHALL HAVE A 28 DAY DESIGN COMPRESSIVE STRENGTH OF 3,500 PSI, MID OR HIGH RANGE WATER REDUCING AGENT AND A 5-6" SLUMP.
4. BUILDING CONCRETE SHALL HAVE MAXIMUM WATER TO CEMENT RATIOS AS FOLLOWS:
   A. 3,500 PSI CONCRETE - 0.50
   B. 4,000 PSI CONCRETE - 0.46
   C. 4,500 PSI CONCRETE - 0.42
5. PLACEMENT OF CONCRETE SHALL BE IN CONFORMANCE WITH ACI 117-06 "SPECIFICATION FOR TOLERANCE FOR CONCRETE AND MATERIALS AND COMMENTARY".
6. IF THE AIR TEMPERATURE IS GREATER THAN 90 DEGREES WITHIN 24 HOURS AFTER PLACEMENT, HOT WEATHER CONCRETE PROCEDURES SHALL BE USED. THE CONTRACTOR SHALL SUBMIT A PROCEDURE TO THE ENGINEER FOR APPROVAL. THESE PROCEDURES MAY INCLUDE THE FOLLOWING:
   A. PLACING THE CONCRETE IN THE EARLY MORNING HOURS
   B. THE USE OF EVAPORATION REDUCER
   C. THE USE OF MISTING AS A CURING METHOD
   D. THE USE OF WET BLANKETS AS A CURING METHOD
7. ALL CONCRETE WORK SHALL BE IN ACCORDANCE WITH THE AMERICAN CONCRETE INSTITUTE STANDARDS "BUILDING CODE REQUIREMENTS FOR STRUCTURAL CONCRETE" (ACI 318) AND "SPECIFICATIONS FOR STRUCTURAL CONCRETE FOR BUILDINGS" (ACI 301), LATEST EDITIONS. SPLICES IN REINFORCEMENT SHALL MEET CLASS B TENSION LAP REQUIREMENTS UNLESS NOTED OTHERWISE.
8. COVER FOR ALL REINFORCEMENT SHALL MEET THE COVERAGE REQUIREMENTS AS SHOWN IN THE LATEST ACI 318 OR AS SHOWN ON THE DETAILS. COVER DIMENSIONS SHOWN ON THE DETAILS CONTROL OVER ACI.
9. ANY CONCRETE TO BE PLACED FURTHER THAN 16 FEET FROM THE END OF A CONCRETE TRUCK SHALL BE PUMPED WITH A COMMERCIAL CONCRETE PUMPING TRUCK OR OTHER PLACEMENT METHOD APPROVED BY THE ENGINEER. THE CONCRETE TRUCK SHALL NOT BE ALLOWED TO DRIVE OVER THE SUBGRADE OR THE SLAB REINFORCEMENT.
10. REINFORCING STEEL SHALL BE DOMESTIC DEFORMED BILLET STEEL CONFORMING TO ASTM A-615 GRADE 60. #4 REINFORCEMENT BARS AND SMALLER SHALL BE COLD BENT WHENEVER BENDING IS REQUIRED IN THE FIELD. REINFORCEMENT GREATER THAN A #4 BAR MAY NOT BE BENT IN THE FIELD WITHOUT APPROVAL OF THE ENGINEER.
11. PROVIDE CORNER BARS IN STRIP FOOTINGS, THE SAME SIZE AND NUMBER AS CONTINUOUS REINFORCEMENT UNLESS NOTED OTHERWISE.
12. WHERE REQUIRED, STEP NEW FOOTINGS UP OR DOWN IN RATIO OF TWO HORIZONTALS TO ONE VERTICAL TO MATCH BEARING ELEVATION OF EXISTING FOOTINGS. CAST STEPPED FOOTINGS MONOLITHICALLY.
13. DOWEL CONCRETE WALLS AND PIERS INTO FOOTINGS WITH DOWELS THE SAME SIZE AND SPACING AS VERTICAL REINFORCEMENT. EXTEND DOWELS TO WITHIN 3" OF BOTTOM OF FOOTING, TERMINATED WITH ACI STD. 90 DEGREE HOOK, UNLESS NOTED OTHERWISE.
14. PROVIDE A ROUGH CONCRETE SURFACE (1/4" MINIMUM AMPLITUDE) AT THE INTERSECTION OF CONCRETE WALLS, STEM WALLS, AND PILASTERS WITH THE TOP OF FOOTINGS. DO NOT PROVIDE A KEYWAY UNLESS SHOWN OR NOTED ON THE DRAWINGS.
15. PROVIDE 3/4" x 3/4" CHAMFER AT ALL EXPOSED CORNERS UNLESS NOTED OTHERWISE.
16. NO HOLES OR OPENINGS ARE PERMITTED THROUGH CONCRETE SLABS, BEAMS, OR WALLS EXCEPT AS FOLLOWS:
    A. WHERE SHOWN AND AS DETAILED ON DRAWINGS.
    B. MISCELLANEOUS HOLES THROUGH SLABS OR WALLS WHICH DO NOT DISPLACE MORE THAN ONE BAR. THESE HOLES DO NOT REQUIRE ADDITIONAL REINFORCEMENT.
17. LOCATE ADDITIONAL CONSTRUCTION JOINTS REQUIRED TO FACILITATE CONSTRUCTION AS ACCEPTABLE TO ENGINEER. LOCATE WALL CONSTRUCTION JOINTS AT MASONRY CONTROL JOINTS WHERE POSSIBLE. PLACE REINFORCEMENT CONTINUOUSLY THROUGH JOINT. DETAIL JOINT AND SHOW LOCATIONS AND DETAILS ON SHOP DRAWINGS.
18. CAST CONCRETE ON SLOPED SURFACES BEGINNING AT LOWEST ELEVATION AND CONTINUING MONOLITHICALLY TOWARD HIGHER ELEVATIONS UNTIL INTENDED POUR IS COMPLETE.
19. REINFORCING BARS, BAR SUPPORTS, AND SPACERS SHALL BE DETAILED AND PROVIDED IN ACCORDANCE WITH THE LATEST ACI DETAILING MANUAL. USE WIRE-BAR SUPPORTS COMPLYING WITH CRSI SPECIFICATIONS. SUPPORTS SHALL NOT BE PLACED FURTHER THAN 4 FEET APART. DAYTON SUPERIOR PRODUCTS OR EQUAL UNLESS NOTED OTHERWISE IN THE SPECIFICATIONS.
    A. AT SLABS-ON-GRADE: (SLAB THICKNESS MINUS 1 1/2 INCHES) HIGH. USE SUPPORTS WITH SAND PLATES OR HORIZONTAL RUNNERS WHERE BASE MATERIAL WILL NOT SUPPORT CHAIR LEGS. CONCRETE BLOCK OR CLAY MASONRY MAY NOT BE USED.
    B. AT FOOTINGS: 3 IN. HIGH. USE SUPPORTS WITH SAND PLATES OR HORIZONTAL RUNNERS WHERE BASE MATERIAL WILL NOT SUPPORT CHAIR LEGS. CONCRETE BLOCK OR CLAY MASONRY MAY NOT BE USED.
    C. FOR EXPOSED TO VIEW CONCRETE SURFACES WHERE LEGS OF SUPPORTS ARE IN CONTACT WITH THE FORMS, PROVIDE SUPPORTS WITH LEGS THAT ARE PLASTIC PROTECTED (CRSI, CLASS 1) OR STAINLESS STEEL PROTECTED (CRSI, CLASS 2).
20. SEE ARCHITECTURAL AND MECHANICAL/ELECTRICAL DRAWINGS FOR EXACT LOCATIONS AND DETAILS OF DEPRESSED SLABS, FLOOR DRAIN LOCATIONS, PLATFORMS, CURBS, AND PADS.
21. USE ONE OF THE FOLLOWING SEALERS ON ALL INTERIOR EXPOSED CONCRETE SURFACES WHICH DO NOT RECEIVE A STAIN, PAINT OR OTHER TYPE OF COATING:
    A. SEAL HARD BY L&M
    B. EUCO DIAMOND HARD BY EUCLID
22. EVAPORATION REDUCERS SHALL BE USED AFTER EACH FINISHING OPERATION ON THE CAST IN PLACE CONCRETE FLOOR SLAB UNLESS PRIOR APPROVAL FROM THE ENGINEER HAS BEEN OBTAINED TO NOT USE. SEE SPECIFICATIONS FOR PRODUCT REQUIREMENTS.
23. SAWCUTS IN CONCRETE SLABS ON GRADE SHALL BE MADE AS SOON AS THE CONCRETE IS OF SUFFICIENT STRENGTH TO SAW WITHOUT RAVELING THE AGGREGATE. ANY TIME LAPSE GREATER THAN 8 HOURS AFTER PLACING THE CONCRETE SHALL BE PERMITTED ONLY IF APPROVED BY THE ENGINEER.
24. ADHESIVE ANCHORS WITH REBAR OR THREADED RODS SHALL BE AS NOTED BELOW. INSTALL ACCORDING TO THE MANUFACTURER'S RECOMMENDATIONS, WHICH INCLUDES CLEANING THE HOLE WITH AIR AND USING A MANUFACTURER APPROVED DISPENSING TOOL WITH MIXING NOZZLE.
    A. INTO CONCRETE: DEWALT AC200+ ACRYLIC INJECTION ADHESIVE ANCHORING SYSTEM OR APPROVED EQUAL.
25. NO PIPING OR CONDUITS SHALL BE INSTALLED IN ANY CONCRETE WITHOUT THE APPROVAL OF THE ENGINEER.
26. ALL DOWELS, ANCHOR BOLTS, EMBEDDED STEEL, ELECTRICAL CONDUITS, PIPE SLEEVES, PIPING, WATERSTOPS, INSERTS, GROUNDS, AND ALL OTHER EMBEDDED ITEMS AND FORMED DETAILS SHALL BE IN PLACE BEFORE START OF CONCRETE PLACEMENT. FOR EMBEDDED ITEMS AND REQUIRED DETAILS, SEE CIVIL, MECHANICAL, ELECTRICAL, AND ARCHITECTURAL DRAWINGS. VERIFY SIZE AND LOCATION OF ALL OPENINGS.
27. ALL PIPING AND DUCT PENETRATIONS THROUGH NEW STRUCTURAL SLABS ARE TO BE SLEEVED OR CHASED. NO CORING OF SLAB IS PERMITTED. PIPING THROUGH EXISTING STRUCTURAL SLABS MAY BE CORED IF APPROVED BY ENGINEER.
28. THE VAPOR RETARDER INDICATED ON THE SECTIONS SHALL BE EITHER STEGO 15 MIL CLASS A VAPOR RETARDER OR VAPOR BLOCK 15 BY RAVEN INDUSTRIES. USE STEGO OR RAVEN TAPE ON ALL LAPS AND AROUND ALL PENETRATIONS.

STRUCTURAL STEEL NOTES

1. STRUCTURAL STEEL FABRICATION AND ERECTION SHALL CONFORM TO THE AISC MANUAL OF STEEL CONSTRUCTION.
2. SHOP AND FIELD WELDED CONNECTIONS SHALL CONFORM TO THE AMERICAN WELDING SOCIETY "STRUCTURAL WELDING CODE", LATEST EDITION AND BE PERFORMED BY CERTIFIED WELDERS.
3. ANY CONNECTIONS WITHOUT WELD SYMBOLS SHALL BE AT A MINIMUM WELDED ALL AROUND WITH THE 5/16" MINIMUM FILLET WELD OR 5/16" PARTIAL PENETRATION GROOVE WELD.
4. STRUCTURAL STEEL ANGLES, PLATES, C SHAPES ETC. SHALL CONFORM TO ASTM A36 REQUIREMENTS (36 KSI). STRUCTURAL STEEL W SHALL CONFORM TO ASTM A992 (50 KSI). STRUCTURAL TUBING AND PIPES SHALL CONFORM TO THE ASTM A500 GRADE B REQUIREMENTS (46 KSI).
5. DO NOT PLACE HOLES THROUGH STRUCTURAL STEEL MEMBERS EXCEPT AS SHOWN AND DETAILED ON STRUCTURAL DRAWINGS.
6. CONNECTIONS:
   A. ALL BOLTED CONNECTIONS ARE TO BE 3/4" MINIMUM DIAMETER A325 TYPE N OR SC BOLTS IN STANDARD HOLES UNLESS NOTED OTHERWISE ON DRAWINGS OR AS DETERMINED BY THE CONNECTION DESIGNER. DESIGN USING STANDARD HOLES UNLESS NOTED OTHERWISE OR REQUIRED FOR ERECTION.
   B. MINIMUM CAPACITY OF BEAM CONNECTIONS: FOR CONNECTIONS NOT SPECIFICALLY DETAILED, PROVIDE CONNECTION CAPACITY OF AT LEAST THAT REQUIRED BY PART 3 OF THE AISC MANUAL IN THE SECTION "MAXIMUM TOTAL UNIFORM LOAD TABLES" FOR LRFD DESIGN OR "ALLOWABLE LOADS ON BEAMS" FOR ALLOWABLE STRESS DESIGN. CONCENTRATED LOADS NEAR SUPPORTS MUST BE ADDED.
   C. THE DESIGN SHEAR FOR EACH CONNECTION UNLESS NOTED ON THE DRAWINGS SHALL BE 110% OF THE REACTION FROM A UNIFORM LOAD OVER THE SPAN WHICH CREATES THE MAXIMUM DESIGN MOMENT FOR ROOF/FLOOR BEAM CONNECTIONS AND 180% FOR COMPOSITE FLOOR CONNECTIONS. THE MINIMUM REACTION SHALL BE 14 KIPS.
   D. INDICATOR BOLTS EQUAL TO TENSION FOR CONTROL BOLTS OF THE LeJEUNE COMPANY OF BURNSVILLE, MINNESOTA SHALL BE USED.
   E. CONNECTION DESIGN BY FABRICATOR WILL BE SUBJECT TO REVIEW AND APPROVAL BY ENGINEER. USE MINIMUM OF TWO 3/4" DIAMETER A325 BOLTS PER CONNECTION.
7. FRAME ALL OPENINGS IN ROOF DECK 8" OR LARGER WITH A STRUCTURAL STEEL MEMBER ON ALL SIDES EXCEPT WHERE A SIDE MAY BE WITHIN 1'-0" OF ANOTHER FRAMING MEMBER. FRAMING IS NOT REQUIRED FOR ROOF OPENINGS SMALLER THAN 8".

STEEL JOIST AND ROOF DECK NOTES

1. STEEL JOISTS SHALL CONFORM TO THE REQUIREMENTS OF THE STEEL JOIST INSTITUTE STANDARD SPECIFICATIONS FOR OPEN WEB JOISTS. MATERIAL SHALL BE DOMESTIC STEEL WITH ANGLES FOR BOTTOM CHORDS.

   THE METAL DECK SHALL BE 20 GAUGE, TYPE 1.5 VL BY VULCRAFT OR EQUAL. THE DECK SHALL BE GALVANIZED. DECK SHALL BE WELDED TO SUPPORTS AT 12 INCHES OC AT ALL SUPPORTS (INTERMEDIATE AND ENDS). WELDS SHALL BE 5/8" PUDDLE WELDS WITH A MAXIMUM BURN-THROUGH OF 30 PERCENT AND WITH A MAXIMUM OF 10 PERCENT FAILING.
2. ALL JOISTS SHALL HAVE BOTTOM CHORD UPLIFT BRIDGING AT EACH END AND BE DESIGNED FOR 20 POUNDS PER SQUARE FOOT NET UPLIFT.
3. PROVIDE L3X3X1/4 AROUND ALL DECK PENETRATIONS NOT SHOWN ON PLAN WHICH ARE 8 INCHES OR GREATER, FOR METAL DECK SUPPORT.
4. WELD JOIST GIRDER AND JOIST BOTTOM CHORD CONNECTIONS ONLY AFTER ROOFING AND OTHER DEAD LOADS HAVE BEEN APPLIED.
5. LOCATE CONCENTRATED LOADS ON JOISTS AND JOIST GIRDERS AT PANEL POINTS. PROVIDE ANGLE WEB MEMBERS TO CREATE INTERMEDIATE PANEL POINTS AS REQUIRED. MANUFACTURER SHALL DIRECT INSTALLER AS TO METHOD OF INSTALLATION AND MATERIAL REQUIRED. JOISTS AND JOIST GIRDERS SHALL BE SHOP REINFORCED FOR ALL LOADS PROVIDED ON DRAWINGS. FIELD REINFORCING SHALL BE PROVIDED AS DETAILED ON THE DRAWINGS.
6. VERIFY SIZE, LOCATION, AND NUMBER OF ROOF OPENINGS WITH MECHANICAL AND ELECTRICAL PLANS AND CONTRACTORS.
7. PROVIDE BRIDGING ANCHORS FIRMLY ANCHORED TO MASONRY WALLS, BEAMS, AND COLUMNS AT EACH END OF EACH ROW OF BRIDGING, TOP AND BOTTOM.
8. INSTALL JOISTS WITHIN A HORIZONTAL SWEEP TOLERANCE OF 1/4" IN 10 FT.

COLD-FORMED METAL FRAMING NOTES

1. ALL STUDS, JOISTS, AND RAFTERS SHALL BE STUD MEMBERS BY CLARK WITH A 1 5/8" FLANGE OR EQUAL, UNLESS NOTED OTHERWISE. TRACK MEMBERS SHALL HAVE THE SAME GAUGE AS THE STUD SPECIFIED; EXCEPT FOR LOAD BEARING STUDS, WHERE THE TRACKS SHALL BE A MINIMUM OF 16 GAUGE. WHERE GAUGE IS INDICATED ON DRAWINGS, THE FOLLOWING MILS THICKNESS SHALL BE USED: 12 GAUGE=97 MILS, 14 GAUGE=68 MILS, 16 GAUGE=54 MILS, 18 GAUGE=43 MILS, 20 GAUGE=33 MILS, 22 GAUGE=27 MILS. ALL SCREWS SHALL BE TEKS BY ITW BUILDEX OR EQUAL. ALL SCREWS IN EXTERIOR WALLS SHALL BE ZINC PLATED WITH A TYPE II ASTM B 633 COATING.
2. ALL MEMBERS AND CONNECTIONS SHALL BE IN ACCORDANCE WITH THE AMERICAN IRON AND STEEL INSTITUTE "SPECIFICATION FOR THE DESIGN OF COLD FORMED STEEL STRUCTURAL MEMBERS", LATEST EDITION.
3. ALL COLD ROLLED STEEL SHALL CONFORM TO ASTM A653 WITH A MINIMUM YIELD STRENGTH OF 50 KSI FOR 16 GAUGE AND LOWER, AND 33 KSI FOR 18 GAUGE AND HIGHER.
4. ALL FRAMING MEMBERS SHALL BE SQUARE CUT FOR A SNUG FIT TO THE ATTACHING MEMBERS. AXIALLY LOADED STUDS SHALL BE INSTALLED TO INSURE THAT THE ENDS ARE SQUARE AND TOUCH THE RUNNERS. ANY STUDS WHICH DO NOT BEAR DIRECTLY ON THE RUNNERS SHALL HAVE A 14 GAGE CLIP ANGLE ADDED TO THE SIDE OF THE STUD.
5. INSTALL HORIZONTAL BRIDGING IN ALL STUDS AT 4 FT OC. ALL RAFTERS AND CEILING JOISTS SHALL HAVE BRIDGING AT THE MIDPOINT OR AT 8FT OC MAX.
6. NO SPLICING OF STUDS OR RAFTERS IS ALLOWED.
7. PROVIDE FLAT STRAP BOTTOM BRIDGING AT LEAST 1 INCH WIDE BY 12 GAUGE AT THE MIDSPAN OF SPANS 16 FT OR LESS AND AT THE THIRD POINTS OF GREATER SPANS. BRIDGING SHALL BE SCREWED TO THE BOTTOM OF THE JOISTS WITH AT LEAST TWO #12 TEK SCREWS. ANY TOP FLANGE BRIDGING REQUIRED FOR ERECTION SHALL BE INSTALLED AS REQUIRED.
8. CLIPS, HOLDDOWNS, AND JOIST HANGERS SHALL BE EQUAL TO SIMPSON CONNECTORS AND SHALL BE INSTALLED ACCORDING TO THE SPECIFICATIONS OF THE STEEL NETWORK OR SIMPSON STRONG-TIE COMPANY, INC. ALL OPTIONAL HOLES (TRIANGLE, OBLONG, AND DIAMOND) SHALL BE FILLED WITH SCREWS.
9. ALL CONNECTIONS FROM LIGHTGAUGE STUDS TO STRUCTURAL STEEL OR METAL DECK SHALL BE MADE USING THE EQUAL OF A STIFFCLIP OR VERTICLIP AS SHOWN IN TYPICAL DETAILS

STRUCTURAL ABBREVIATIONS

ADDL	ADDITIONAL
ADJ	ADJACENT
APPROX	APPROXIMATE
ARCH	ARCHITECT, ARCHITECTURAL
B/	BOTTOM OF
BLDG	BUILDING
BP	BASEPLATE
BRG	BEARING
CANT	CANTILEVER
CFMF	COLD-FORMED METAL FRAMING
CJ	CONSTRUCTION JOINT
CJT	CONTROL JOINT
CL	CENTERLINE
CLR	CLEAR
CMU	CONCRETE MASONRY UNIT
COL	COLUMN
CONC	CONCRETE
CONT	CONTINUOUS
COORD	COORDINATE
DIA, Ø	DIAMETER
DIM	DIMENSION
DN	DOWN
do	DITTO
DWG	DRAWING
EA	EACH
EF	EACH FACE
EJ	EXPANSION JOINT
EL	ELEVATION
ELEC	ELECTRICAL
ELEV	ELEVATOR
EMBED	EMBEDMENT
ENGR	ENGINEER
EOD	EDGE OF DECK
EOS	EDGE OF SLAB
EQ	EQUAL
EQUIP	EQUIPMENT
ES	EACH SIDE
EW	EACH WAY
EXIST	EXISTING
EXP	EXPANSION
EXT	EXTERIOR
FD	FLOOR DRAIN
FDN	FOUNDATION
FTG	FOOTING
GA	GAGE
GALV	GALVANIZED
HI	HIGH
HORIZ	HORIZONTAL
HP	HIGH POINT
HSS	HOLLOW STEEL SECTION
HVAC	HEATING/VENTILATING/AIR CONDITIONING
INFO	INFORMATION
INT	INTERIOR
INV	INVERT
K	KIP=1000 LBS
L	ANGLE
LBS	POUNDS
LG	LONG
LLH	LONG LEG HORIZONTAL
LLV	LONG LEG VERTICAL
LO	LOW
LOC	LOCATION
LP	LOW POINT
LVL	LAMINATED VENEER LUMBER
LW	LIGHT WEIGHT

MANUF	MANUFACTURER
MAX	MAXIMUM
MECH	MECHANICAL
MIN	MINIMUM
MISC	MISCELLANEOUS
MO	MASONRY OPENING
NA	NOT APPLICABLE
NIC	NOT IN CONTRACT
NOM	NOMINAL
NW	NORMAL WEIGHT
OC	ON CENTER
OD	OUTSIDE DIAMETER
OPNG	OPENING
OPP	OPPOSITE
PAF	POWER-ACTUATED FASTENER
PC	PRECAST
PCF	POUNDS PER CUBIC FOOT
PE	PROFESSIONAL ENGINEER
PERP	PERPENDICULAR
PL	PLATE
PLF	POUNDS PER LINEAL FOOT
PSF	POUNDS PER SQUARE FOOT
PSL	PARALLEL STRAND LUMBER
PT	PRESSURE TREATED
R	RADIUS
RD	ROOF DRAIN
RDP	REGISTERED DESIGN PROFESSIONAL
REINF	REINFORCE(MENT, ING)
REQD	REQUIRED
REV	REVISION
RO	ROUGH OPENING
SF	SQUARE FEET
SIM	SIMILAR
SPA	SPACE
SQ	SQUARE
SS	STAINLESS STEEL
STD	STANDARD
STL	STEEL
T/	TOP OF
TYP	TYPICAL
UNO	UNLESS NOTED OTHERWISE
VERT	VERTICAL
VIF	VERIFY IN FIELD
W/	WITH
WCJ	WALL CONSTRUCTION OR CONTROL JOINT
WP	WORK POINT
WWR	WELDED WIRE REINFORCEMENT

DESIGN CRITERIA

THE FOLLOWING DESIGN LOADS WERE USED FOR THIS BUILDING:

BUILDING CODE: 2022 EDITION OF THE CONNECTICUT STATE BUILDING CODE
2021 INTERNATIONAL BUILDING CODE WITH CONNECTICUT ADMENDMENTS

FLOOR DEAD LOADS:

FLOORING:	4 PSF
4" SLAB ON METAL DECK:	39 PSF
MECH/ELEC/PLUMB:	4 PSF
INSULATION:	3 PSF
SUSPENDED CEILING:	2 PSF
TOTAL	52 PSF

ROOF DEAD LOADS:

ROOFING:	2 PSF
PROTECTION BOARD:	3 PSF
METAL DECK:	3 PSF
MECH/ELEC/PLUMB:	5 PSF
INSULATION	3 PSF
SUSPENDED CEILING:	2 PSF
TOTAL	18 PSF

FLOOR LIVE LOADS:

LIGHT STORAGE AREAS:	125 PSF
ROOF:	100 PSF

ROOF LIVE LOAD: 20 PSF

ROOF SNOW LOAD
WHERE REQUIRED UNBALANCED SNOW AND SNOW DRIFTS SHALL BE CONSIDERED PER ASCE 7-10

GROUND SNOW LOAD, Pg:	30 PSF
FLAT-ROOF SNOW LOAD, Pf:	30 PSF (MIN PER CT. CODE)
SNOW EXPOSURE FACTOR, Ce:	1.0
SNOW LOAD IMPORTANCE FACTOR, Is:	1.0
THERMAL FACTOR, Ct:	1.2

WIND DESIGN DATA:

ULTIMATE WIND SPEED (3 SECOND GUST), Vult:	117 MPH
NOMINAL DESIGN WIND SPEED, Vasd;	91 MPH
RISK CATEGORY:	X
WIND EXPOSURE CATEGORY:	B
INTERNAL PRESSURE COEFFICIENTS:	+/- 0.18

ULTIMATE DESIGN WIND PRESSURES FOR COMPONENTS AND CLADDING PER ASCE FIGURE 30.5-1:

EARTHQUAKE DESIGN DATA:

RISK CATEGORY:	II
SEISMIC IMPORTANCE FACTOR, Ie:	1.0
MAPPED SPECTRAL RESPONSE ACCELERATIONS:	Ss = 0.184 S1 = 0.055
SITE CLASS:	D
DESIGN SPECTRAL RESPONSE ACCELERATIONS:	Sds = 0.196 Sd1 = 0.088
SEISMIC DESIGN CATEGORY:	D
BASIC SEISMIC-FORCE-RESISTING	LIGHT FRAMED WALLS WITH SHEAR PANELS OF OTHER MATERIALS
DESIGN BASE SHEAR:	11.0 KIPS (FIRST FLOOR)
SEISMIC RESPONSE COEFFICIENT, Cs:	0.0988
RESPONSE MODIFICATION FACTOR, R:	2.0
ANALYSIS PROCEDURE USED:	EQUIVALENT LATERAL FORCE METHOD

Drawing Copyright © 2023

CHA
200 Corporate Place, Suite 110
Rocky Hill, CT 06067-1861
860.257.4557 . www.chacompanies.com

DeGennaro Engineering
40 Oregan Trail, Waterford, NY 12188
T: 518-633-1400

University of Hartford
200 BLOOMFIELD AVE
WEST HARTFORD, CT 06117

PLAN NORTH
TRUE NORTH

NOT FOR CONSTRUCTION

IT IS A VIOLATION OF LAW FOR ANY PERSON, UNLESS THEY ARE ACTING UNDER THE DIRECTION OF A LICENSED PROFESSIONAL ENGINEER, ARCHITECT, LANDSCAPE ARCHITECT OR LAND SURVEYOR TO ALTER AN ITEM IN ANY WAY. IF AN ITEM BEARING THE STAMP OF A LICENSED PROFESSIONAL IS ALTERED, THE ALTERING ENGINEER, ARCHITECT, LANDSCAPE ARCHITECT OR LAND SURVEYOR SHALL STAMP THE DOCUMENT AND INCLUDE THE NOTATION "ALTERED BY" FOLLOWED BY THEIR SIGNATURE, THE DATE OF SUCH ALTERATION, AND A SPECIFIC DESCRIPTION OF THE ALTERATION.

UNIVERSITY OF HARTFORD ATHLETIC SPORTS COMPLEX

No.	Submittal / Revision	App'd.	By	Date

STRUCTURAL GENERAL NOTES

Designed By: DJD	Drawn By: DJD	Checked By: DJD
Issue Date: 1/13/2023	Project No: 23001	Scale: AS SHOWN

Drawing No:
S-001

Central File: Update this text with Central file location
Saved: 1/13/2023 3:52:20 PM Current Local File: R22-Hartford Track-Structural_detached.rvt

SPECIAL INSPECTIONS

THE OWNER SHALL ENGAGE AN INDEPENDENT TESTING FIRM TO COMPLETE THE FOLLOWING SPECIAL INSPECTIONS.

REQUIRED STRUCTURAL SPECIAL INSPECTIONS & TESTS OF SOIL

IBC 2018

TYPE	CONTINUOUS SPECIAL INSPECTION	PERIODIC SPECIAL INSPECTION	REFERENCED STANDARD	IBC REFERENCE	REMARKS
VERIFY MATERIALS BELOW SHALLOW FOUNDATION ARE ADEQUATE TO ACHIEVE THE DESIGN BEARING CAPACITY	-	X	-	TABLE 1705.6	BY A LICENSED PROFESSIONAL / CLASSIFY EXISTING SOIL BELOW PROPOSED FOOTING AND VERIFY PRESUMPTIVE BEARING CAPACITY OF 1,500 PSF PER TABLE 1806.2.
VERIFY EXCAVATIONS ARE EXTENDED TO PROPER DEPTH AND HAVE REACHED PROPER MATERIAL	-	X	-	TABLE 1705.6	
PERFORM CLASSIFICATION AND TESTING OF COMPACTED FILL MATERIALS	-	X	-	TABLE 1705.6	PERFORM CLASSIFICATION TESTING ON ALL MATERIALS PRIOR TO PLACEMENT.
VERIFY USE OF PROPER MATERIALS, DENSITIES AND LIFT THICKNESS DURING PLACEMENT AND COMPACTION OF COMPACTED FILL	X	-	-	TABLE 1705.6	BY THE GEOTECHNICAL ENGINEER. PERFORM COMPACTION TESTING ON EACH LIFT TO DETERMINE IN-PLACE DENSITY.
PRIOR TO PLACEMENT OF COMPACTED FILL, INSPECT SUBGRADE AND VERIFY THAT SITE HAS BEEN PREPARED PROPERLY	-	X	-	TABLE 1705.6	

NOTES:
1. SPECIAL INSPECTIONS AND TESTS OF SOILS SHALL BE PERFORMED IN ACCORDANCE WITH TABLE ABOVE AS REPLICATED FROM IBC 2018 TABLE 1705.6
2. THE APPROVED GEOTECHNICAL REPORT AND THE CONSTRUCTION DOCUMENTS PREPARED BY THE REGISTERED DESIGN PROFESSIONALS SHALL BE USED TO DETERMINE COMPLIANCE.
3. WHERE IBC 2018 SECTION 1803 DOES NOT REQUIRE REPORTING OF MATERIALS AND PROCEDURES FOR FILL PLACEMENT, THE SPECIAL INSPECTOR SHALL VERIFY THAT THE IN-PLACE DRY DENSITY OF THE COMPACTED FILL IS NOT LESS THAN 90% OF THE MAXIMUM DRY DENSITY AT OPTIMUM MOISTURE CONTENT DETERMINED IN ACCORDANCE WITH ASTM D 1557.

REQUIRED STRUCTURAL SPECIAL INSPECTIONS & TESTS OF CONCRETE CONSTRUCTION

IBC 2018

TYPE	CONTINUOUS SPECIAL INSPECTION	PERIODIC SPECIAL INSPECTION	REFERENCED STANDARD	IBC REFERENCE	REMARKS
INSPECT REINFORCEMENT, INCLUDING PRESTRESSING TENDONS, AND VERIFY PLACEMENT	-	X	ACI 318: CH 20, 25.2, 25.3, 26.6.1 - 26.6.3	1908.4	TOLERANCES AND REINFORCING PLACEMENT PER ACI 7.5; SPACING LIMITS FOR REINFORCING ACI 7.6; PROTECTION OF REINFORCEMENT PER ACI 7.7
REINFORCING BAR WELDING: a. VERIFY WELDABILITY OF REINFORCING BARS OTHER THAN ASTM A 706 b. INSPECT SINGLE-PASS FILLET WELDS, MAXIMUM 5/16"; AND c. INSPECT ALL OTHER WELDS	- - X	X X -	AWS D1.4 ACI 318: 26.6.4	-	
INSPECT ANCHORS CAST IN CONCRETE	-	X	ACI 318: 17.8.2	-	
INSPECT ANCHORS POST-INSTALLED IN HARDENED CONCRETE MEMBERS a. ADHESIVE ANCHORS INSTALLED IN HORIZONTALLY OR UPWARDLY INCLINED ORIENTATIONS TO RESIST SUSTAINED TENSION LOADS b. MECHANICAL ANCHORS AND ADHESIVE ANCHORS NOT DEFINED IN 4a	X -	- X	ACI 318: 17.8.2.4 ACI 318: 17.8.2	-	SPECIAL INSPECTIONS APPLY TO ANCHOR PRODUCT NAME, TYPE, AND DIMENSIONS, HOLE DIMENSIONS, COMPLIANCE WITH DRILL BIT REQUIREMENTS, CLEANLINESS OF THE HOLE AND ANCHOR, ADHESIVE EXPIRATION DATE, ANCHOR/ADHESIVE INSTALLATION, ANCHOR EMBEDMENT, AND TIGHTENING TORQUE.
VERIFY USE OF REQUIRED DESIGN MIX	-	X	ACI 318: CH 19, 26.4.3, 26.4.4	1904.1, 1904.2, 1908.2, 1908.3	
PRIOR TO CONCRETE PLACEMENT, FABRICATE SPECIMENS FOR STRENGTH TESTS, PERFORM SLUMP AND AIR CONTENT TESTS, AND DETERMINE THE TEMPERATURE OF THE CONCRETE	X	-	ASTM C 172 ASTM C 31 ACI 318: 26.5, 26.12	-	FABRICATE SPECIMENS AT TIME FRESH CONCRETE IS PLACED. ONE EACH DAY (4 CYLINDERS) FOR A GIVEN CLASS OF CONCRETE.
INSPECT CONCRETE AND SHOTCRETE PLACEMENT FOR PROPER APPLICATION TECHNIQUES	X	-	ACI 318: 26.5	1908.6, 1908.7 1908.8	
VERIFY MAINTENANCE OF SPECIFIED CURING TEMPERATURE TECHNIQUES	-	X	ACI 318: 26.5.3 - 26.5.5	1908.9	
INSPECT PRESTRESSED CONCRETE FOR: a. APPLICATION OF PRESTRESSING FORCES; AND b. GROUTING OF BONDED PRESTRESSING TENDONS	X X	- -	ACI 318: 26.10	-	
INSPECT ERECTION OF PRECAST CONCRETE MEMBERS	-	X	ACI 318: CH 26.9	-	
VERIFY IN-SITU CONCRETE STRENGTH, PRIOR TO STRESSING OF TENDONS IN POST-TENSIONED CONCRETE AND PRIOR TO REMOVAL OF SHORES AND FORMS FROM BEAMS AND STRUCTURAL SLABS	-	X	ACI 318: 26.11.2	-	
INSPECT FORMWORK FOR SHAPE, LOCATION AND DIMENSIONS OF THE CONCRETE MEMBER BEING FORMED	-	X	ACI 318: 26.11.1.2(b)	-	

NOTES:
1. SPECIAL INSPECTIONS AND TESTS OF CONCRETE CONSTRUCTION SHALL BE PERFORMED IN ACCORDANCE WITH TABLE ABOVE AS REPLICATED FROM IBC 2018 TABLE 1705.3
2. SPECIAL INSPECTIONS AND TESTS SHALL NOT BE REQUIRED FOR THE FOLLOWING EXCEPTIONS:
   A. ISOLATED SPREAD CONCRETE FOOTINGS OF BUILDINGS 3 STORIES OR LESS ABOVE GRADE THAT ARE FULLY SUPPORTED ON EARTH OR ROCK.
   B. CONTINUOUS CONCRETE FOOTINGS SUPPORTING WALLS OF BUILDINGS 3 STORIES OR LESS ABOVE GRADE THAT ARE FULLY SUPPORTED ON EARTH OR ROCK WHERE:
      a. THE FOOTINGS SUPPORT WALLS OF LIGHT-FRAME CONSTRUCTION
      b. THE FOOTINGS ARE DESIGNED IN ACCORDANCE WITH TABLE 1809.7 - PRESCRIPTIVE FOOTINGS SUPPORTING WALLS OF LIGHT-FRAME CONSTRUCTION.
      c. THE STRUCTURAL DESIGN OF THE FOOTING IS BASED ON A SPECIFIED COMPRESSIVE STRENGTH, F'_c, NOT MORE THAN 2,500 PSI, REGARDLESS OF THE COMPRESSIVE STRENGTH SPECIFIED IN THE APPROVED CONSTRUCTION DOCUMENTS OR USED IN THE FOOTING CONSTRUCTION.
   C. NONSTRUCTURAL CONCRETE SLABS SUPPORTED DIRECTLY ON THE GROUND, INCLUDING PRESTRESSED SLABS ON GRADE, WHERE THE EFFECTIVE PRESTRESS IN THE CONCRETE IS LESS THAN 150 PSI.
   D. CONCRETE FOUNDATION WALLS CONSTRUCTED IN ACCORDANCE WITH TABLE 1807.1.6.2 - CONCRETE FOUNDATION WALLS
   E. CONCRETE PATIOS, DRIVEWAYS AND SIDEWALKS, ON GRADE.

REQUIRED STRUCTURAL SPECIAL INSPECTIONS & TESTS OF STRUCTURAL STEEL CONSTRUCTION

IBC 2018/ AISC 360-16

TYPE	QUALITY CONTROL	QUALITY ASSURANCE	REFERENCED STANDARD	REMARKS
INSPECTION TASKS PRIOR TO BOLTING			AISC 360: N6	FOR SNUG-TIGHT JOINTS, INSPECTIONS TASKS PRE-INSTALLATION AS SHOWN BELOW ARE NOT REQUIRED
MANUFACTURER'S CERTIFICATIONS AVAILABLE FOR FASTENER MATERIALS	O	P	AISC 360: TABLE N5.6-1	
FASTENERS MARKED IN ACCORDANCE WITH ASTM REQUIREMENTS	O	O	AISC 360: TABLE N5.6-1	
CORRECT FASTENERS SELECTED FOR THE JOINT DETAIL (GRADE, TYPE, BOLT LENGTH, THREAD LOCATIONS)	O	O	AISC 360: TABLE N5.6-1	
CORRECT BOLTING PROCEDURE SELECTED FOR THE JOINT DETAIL	O	O	AISC 360: TABLE N5.6-1	
CONNECTING ELEMENTS, INCLUDING THE APPROPRIATE FAYING SURFACE CONDITION AND HOLE PREPARATION, IF SPECIFIED, MEET APPLICABLE REQUIREMENTS	O	O	AISC 360: TABLE N5.6-1	
PRE-INSTALLATION VERIFICATION TESTING BY INSTALLATION PERSONNEL OBSERVED AND DOCUMENTED FOR FASTER ASSEMBLIES AND METHODS	P	O	AISC 360: TABLE N5.6-1	
PROTECTED STORAGE PROVIDED FOR BOLTS, NUTS, WASHERS AND OTHER FASTENER COMPONENTS	O	O	AISC 360: TABLE N5.6-1	
INSPECTION TASKS DURING BOLTING			AISC 360: N6	1. FOR SNUG-TIGHT JOINTS, INSPECTIONS TASKS DURING INSTALLATION AS SHOWN BELOW ARE NOT REQUIRED. 2. FOR PRETENSIONED & SLIP-CRITICAL JOINTS, WHEN INSTALLER IS USING TURN-OF-NUT METHOD WITH MATCHMARKING TECHNIQUE, DIRECT-TENSION-INDICATOR METHOD, OR TWIST-OFF TYPE TENSION CONTROL BOLT METHOD, INSPECTION TASKS DURING INSTALLATION AS SHOWN BELOW ARE NOT REQUIRED.
FASTENER ASSEMBLIES PLACED IN ALL HOLES AND WASHERS AND NUTS ARE POSITIONED AS REQUIRED	O	O	AISC 360: TABLE N5.6-2	
JOINT BROUGHT TO THE SNUG-TIGHT CONDITION PRIOR TO THE PRETENSIONING OPERATION	O	O	AISC 360: TABLE N5.6-2	
FASTENER COMPONENT NOT TURNED BY THE WRENCH PREVENTED FROM ROTATING	O	O	AISC 360: TABLE N5.6-2	
FASTENERS ARE PRETENSIONED IN ACCORDANCE WITH THE RCSC SPECIFICATION, PROGRESSING SYSTEMATICALLY FROM THE MOST RIGID POINT TOWARD THE FREE EDGES	O	O	AISC 360: TABLE N5.6-2	
INSPECTION TASKS AFTER BOLTING			AISC 360: N6	
DOCUMENT ACCEPTANCE OR REJECTION OF BOLTED CONNECTIONS	P	P	AISC 360: TABLE N5.6-3	
INSPECTION OF GALVANIZED STRUCTURAL STEEL MAIN MEMBERS			AISC 360: N7	
EXPOSED CUT SURFACES OF GALVANIZED MAIN MEMBERS SHALL BE VISUALLY INSPECTED FOR CRACKS SUBSEQUENT TO GALVANIZING	P	P	AISC 360: N7	CRACKS SHALL BE REPAIRED OR MEMBER REJECTED.
EXPOSED CUT SURFACES & EXPOSED CORNERS OF RECTANGULAR HSS MEMBERS SHALL BE VISUALLY INSPECTED FOR CRACKS SUBSEQUENT TO GALVANIZING	P	P	AISC 360: N7	CRACKS SHALL BE REPAIRED OR MEMBER REJECTED.
OTHER INSPECTION TASKS			AISC 360: N8	
INSPECT FABRICATED STEEL TO VERIFY COMPLIANCE WITH DETAILS SHOWN ON SHOP DRAWINGS	P	O	AISC 360: N8	INCLUDES CORRECT APPLICATION OF SHOP JOINT DETAILS AT EACH CONNECTION
INSPECT ERECTED STEEL FRAME TO VERIFY COMPLIANCE WITH FIELD INSTALLED DETAILS SHOWN ON THE ERECTION DRAWINGS	P	O	AISC 360: N8	INCLUDES BRACES, STIFFENERS, MEMBER LOCATIONS AND JOINT DETAILS AT EACH CONNECTION
PLACEMENT OF ANCHOR RODS AND OTHER EMBEDMENTS SUPPORTING STRUCTURAL STEEL	O	P	AISC 360: N8	VERIFY & DOCUMENT DIAMETER, GRADE, TYPE AND LENGTH OF ANCHOR RODS OR EMBEDDED ITEM AND DEPTH OF EMBEDMENT PRIOR TO CONCRETE PLACEMENT.
INSPECT FABRICATED STEEL OR ERECTED STEEL FRAME TO VERIFY COMPLIANCE WITH DETAILS SHOWN ON THE CONSTRUCTION DOCUMENTS	O	P	AISC 360: N8	INCLUDES BRACES, STIFFENERS, MEMBER LOCATIONS AND JOINT DETAILS AT EACH CONNECTION
INSPECTION TASKS PRIOR TO WELDING			AISC 360: N4	
WELDER QUALIFICATION RECORDS AND CONTINUITY RECORDS	P	O	AISC 360: TABLE N5.4-1	
WELDING PROCEDURE SPECIFICATIONS (WPSs) AVAILABLE	P	P	AISC 360: TABLE N5.4-1	
MANUFACTURER CERTIFICATIONS FOR WELDING CONSUMABLES AVAILABLE	P	P	AISC 360: TABLE N5.4-1	
MATERIAL IDENTIFICATION	O	O	AISC 360: TABLE N5.4-1	MATERIAL TYPE & GRADE
WELDER IDENTIFICATION SYSTEM	O	O	AISC 360: TABLE N5.4-1	
FIT-UP OF GROOVE WELDS (INCLUDING JOINT GEOMETRY) • JOINT PREPARATION • DIMENSIONS (ALIGNMENT, ROOT OPENING, ROOT FACE, BEVEL) • CLEANLINESS (CONDITION OF STEEL SURFACES) • TACKING (TACK WELD QUALITY & LOCATION) • BACKING TYPE & FIT (IF APPLICABLE)	O	O	AISC 360: TABLE N5.4-1	
FIT-UP OF CJP GROOVE WELDS OF HSS T-, Y1 AND K-JOISTS WITHOUT BACKING (INCLUDING JOINT GEOMETRY) • JOINT PREPARATION • DIMENSIONS (ALIGNMENT, ROOT OPENING, ROOT FACE, BEVEL) • CLEANLINESS (CONDITION OF STEEL SURFACES) • TACKING (TACK WELD QUALITY & LOCATION)	P	O	AISC 360: TABLE N5.4-1	
CONFIGURATION AND FINISH OF ACCESS HOLES	O	O	AISC 360: TABLE N5.4-1	
FIT-UP OF FILLET WELDS • DIMENSIONS (ALIGNMENT, GAPS AT ROOT) • CLEANLINESS (CONDITION OF STEEL SURFACES) • TACKING (TACK WELD QUALITY & LOCATION)	O	O	AISC 360: TABLE N5.4-1	
CHECK WELDING EQUIPMENT	O	-	AISC 360: TABLE N5.4-1	

NOTES:
1. SPECIAL INSPECTIONS AND TESTS OF STRUCTURAL STEEL CONSTRUCTION SHALL BE PERFORMED IN ACCORDANCE WITH THE QUALITY ASSURANCE INSPECTION REQUIREMENTS OF AISC 360-16, CHAPTER N: QUALITY CONTROL AND QUALITY ASSURANCE.
2. QC INSPECTION TASKS SHALL BE PERFORMED BY THE FABRICATOR'S OR ERECTOR'S QUALITY CONTROL INSPECTOR.
3. QA INSPECTION OF FABRICATED ITEMS SHALL BE MADE AT THE FABRICATOR'S PLANT . QA INSPECTION OF THE ERECTED STEEL SYSTEM SHALL BE MADE AT THE PROJECT SITE. THE QUALITY ASSURANCE INSPECTOR SHALL SCHEDULE THIS WORK TO MINIMIZE INTERRUPTION TO ALL WORK.
4. WHERE A TASK IS NOTED TO BE PERFORMED BY BOTH QC AND QA, IT IS PERMITTED TO COORDINATE THE INSPECTION SO THAT THE INSPECTION FUNCTIONS ARE PERFORMED BY ONLY ONE PARTY.
5. INSPECTION TASKS ARE IDENTIFIED IN TABLE ABOVE AS FOLLOWS:
   O - OBSERVE THESE ITEMS ON AN INTERMITTENT BASIS. OPERATIONS NEED NOT BE DELAYED PENDING THESE INSPECTIONS.
   P - PERFORM THESE TASKS FOR EACH WELDED JOINT OR MEMBER

REQUIRED STRUCTURAL SPECIAL INSPECTIONS & TESTS OF STRUCTURAL STEEL CONSTRUCTION

IBC 2018/ AISC 360-16

TYPE	QUALITY CONTROL	QUALITY ASSURANCE	REFERENCED STANDARD	REMARKS
INSPECTION TASKS DURING WELDING			AISC 360: N5	OBSERVATION OF WELDING OPERATIONS AND VISUAL INSPECTION OF IN-PROCESS AND COMPLETED WELDS SHALL BE THE PRIMARY METHOD OF CONFIRMATION
CONTROL AND HANDLING OF WELDING CONSUMABLES • PACKAGING • EXPOSURE CONTROL	O	O	AISC 360: TABLE N5.4-2	
NO WELDING OVER CRACKED TACK WELDS	O	O	AISC 360: TABLE N5.4-2	
ENVIRONMENTAL CONDITIONS • WIND SPEED WITHIN LIMITS • PRECIPITATION AND TEMPERATURE	O	O	AISC 360: TABLE N5.4-2	
WPS FOLLOWED • SETTINGS ON WELDING EQUIPMENT • TRAVEL SPEED • SELECTED WELDING MATERIALS • SHIELDING GAS TYPE/FLOW RATE • PREHEAT APPLIED • INTERPASS TEMPERATURE MAINTAINED (MIN/MAX) • PROPER POSITION (F, V, H, OH)	O	O	AISC 360: TABLE N5.4-2	
WELDING TECHNIQUES • INTERPASS AND FINAL CLEANING • EACH PASS WITHIN PROFILE LIMITATIONS • EACH PASS MEETS QUALITY REQUIREMENTS	O	O	AISC 360: TABLE N5.4-2	
PLACEMENT AND INSTALLATION OF STEEL HEADED STUD ANCHORS	P	P	AISC 360: TABLE N5.4-2	
INSPECTION TASKS AFTER WELDING			AISC 360: N5	OBSERVATION OF WELDING OPERATIONS AND VISUAL INSPECTION OF IN-PROCESS AND COMPLETED WELDS SHALL BE THE PRIMARY METHOD OF CONFIRMATION
WELDS CLEANED	O	O	AISC 360: TABLE N5.4-3	
SIZE, LENGTH AND LOCATION OF WELDS	P	P	AISC 360: TABLE N5.4-3	
WELDS MEET VISUAL ACCEPTANCE CRITERIA • CRACK PROHIBITION • WELD/BASE-METAL FUSION • CRATER CROSS SECTION • WELD PROFILES • WELD SIZE • UNDERCUT • POROSITY	P	P	AISC 360: TABLE N5.4-3	
ARC STRIKES	P	P	AISC 360: TABLE N5.4-3	
k-AREA	P	P	AISC 360: TABLE N5.4-3	
BACKING REMOVED AND WELD TABS REMOVED (IF REQD)	P	P	AISC 360: TABLE N5.4-3	
REPAIR ACTIVITIES	P	P	AISC 360: TABLE N5.4-3	
DOCUMENT ACCEPTANCE OR REJECTION OF WELDED JOINT OR MEMBER	P	P	AISC 360: TABLE N5.4-3	
NONDESTRUCTIVE TESTING OF WELDED JOINTS			AISC 360: N5	
ULTRASONIC TESTING (UT), MAGNETIC PARTICLE TESTING (MT), PENETRANT TESTING (PT), AND RADIOGRAPHIC TESTING (RT), WHERE REQUIRED	-	P	AISC 360: N5a AWS D1.1	
NONDESTRUCTIVE TESTING (NDT) OF CJP GROOVE WELDS • RISK CATEGORY I - NOT REQUIRED • RISK CATEGORY II - 10% OF ALL WELDS • RISK CATEGORY III OR IV - ALL WELDS	- - -	**NOT REQD** **10% WELDS** **ALL WELDS**	AISC 360: N5b	NDT OF CJP GROOVE WELDS IN MATERIALS LESS THAN 5/16" THICK IS NOT REQUIRED. ULTRASONIC TESTING SHALL BE PERFORMED ON CJP GROOVE WELDS IN BUTT, T- AND CORNER JOINTS SUBJECT TO TRANSVERSELY APPLIED TENSION LOADING IN MATERIALS 5/16" THICK OR GREATER

Drawing Copyright © 2023

CHA
200 Corporate Place, Suite 110
Rocky Hill, CT 06067-1861
860.257.4557 www.chacompanies.com

DeGennaro Engineering
40 Oregan Trail, Waterford, NY 12188
T: 518-633-1400

University of Hartford

University of Hartford
200 BLOOMFIELD AVE
WEST HARTFORD, CT 06117

PLAN NORTH

TRUE NORTH

NOT FOR CONSTRUCTION

IT IS A VIOLATION OF LAW FOR ANY PERSON, UNLESS THEY ARE ACTING UNDER THE DIRECTION OF A LICENSED PROFESSIONAL ENGINEER, ARCHITECT, LANDSCAPE ARCHITECT OR LAND SURVEYOR TO ALTER AN ITEM IN ANY WAY. IF AN ITEM BEARING THE STAMP OF A LICENSED PROFESSIONAL IS ALTERED, THE ALTERING ENGINEER, ARCHITECT, LANDSCAPE ARCHITECT OR LAND SURVEYOR SHALL STAMP THE DOCUMENT AND INCLUDE THE NOTATION "ALTERED BY" FOLLOWED BY THEIR SIGNATURE, THE DATE OF SUCH ALTERATION, AND A SPECIFIC DESCRIPTION OF THE ALTERATION.

UNIVERSITY OF HARTFORD ATHLETIC SPORTS COMPLEX

No.	Submittal / Revision	App'd	By	Date

STRUCTURAL SPECIAL INSPECTIONS

Designed By:	Drawn By:	Checked By:
DJD	DJD	DJD
Issue Date: 1/13/2023	Project No: 23001	Scale: AS SHOWN

Drawing No:

S-002

Central File: Update this text with Central file location
Saved: 1/13/2023 3:52:21 PM Current Local File: R22-Hartford Track-Structural_detached.rvt

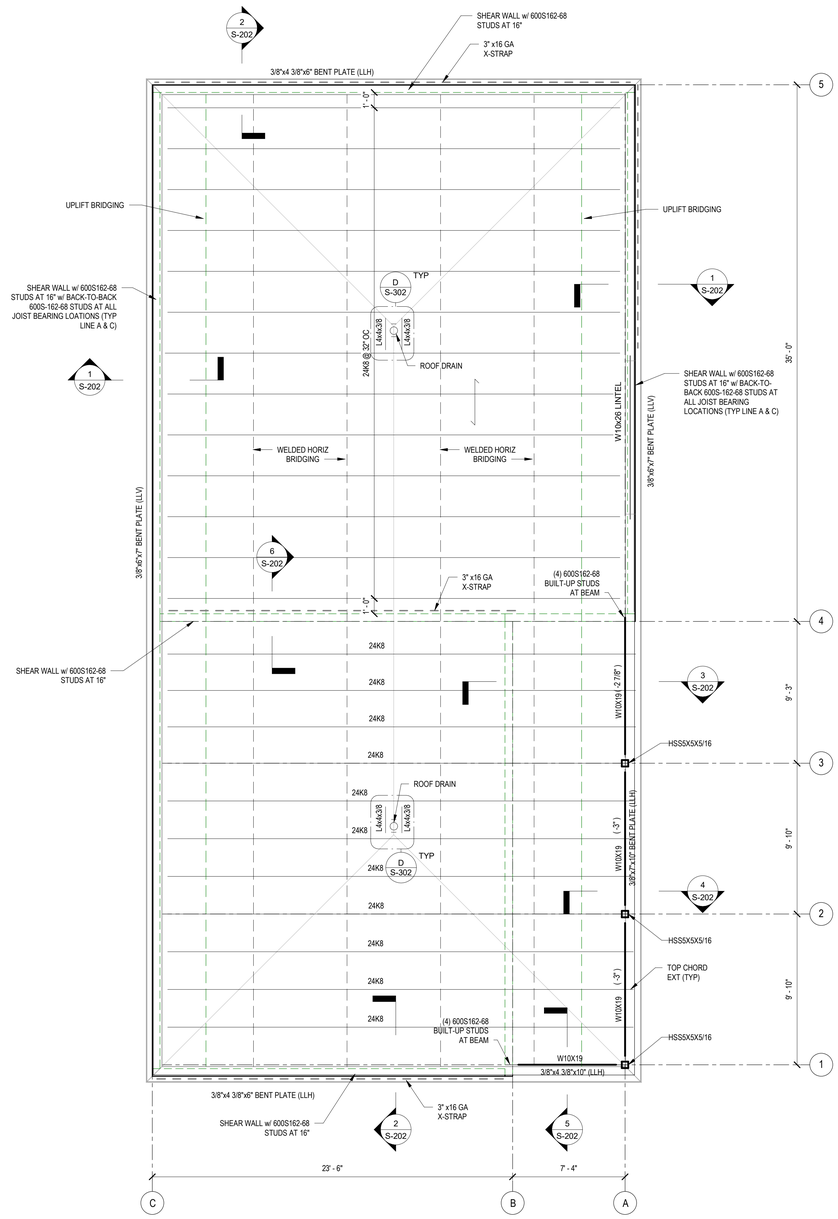

2 ROOF FRAMING PLAN
1/4" = 1'-0"

SCALE: 1/4" = 1'-0"

NOTES:

1. BOTTOM OF DECK ELEVATION IS +11'-8", UNLESS NOTED OTHERWISE. (+ OR -) ELEVATION IS REFERENCE FROM THIS STRUCTURAL STEEL ELEVATION.
2. STRUCTURAL METAL DECK SHALL BE EQUIVALENT TO 1 1/2" x 20 GAGE GALVANIZED VULCRAFT VLI COMPOSITE DECK. DECK SHALL BE PLACED IN CONTINUOUS SHEETS WITH A MINIMUM OF 3 SPAN SUPPORT CONDITION AT ALL LOCATIONS. SUBMIT METAL DECK SHOP DRAWINGS FOR REVIEW PRIOR TO CONSTRUCTION.
3. REFERENCE TYPICAL DETAILS FOR FRAMING AROUND OPENINGS IN METAL ROOF DECK.
4. LIGHT-GAGE EXTERIOR WALL SYSTEM SHALL BE DESIGNED BY A LICENSED PROFESSIONAL ENGINEER ACCORDANCE WITH THE MINIMUM DESIGN LOAD CRITERIA INDICATED ON SHEET S001. SUBMIT SHOP DRAWINGS SIGNED AND SEALED BY A NEW YORK STATE LICENSED PROFESSIONAL ENGINEER.
5. REFER TO STRUCTURAL NOTES ON SHEET S001 FOR JOIST UPLIFT BRIDGING REQUIREMENTS.
6. JOISTS AND METAL DECK HAVE BEEN DESIGNED FOR FUTURE EXPANSION OF ONE ADDITIONAL FLOOR. CONCRETE FILLED METAL DECK IS ANTICIPATED TO HAVE A TOTAL THICKNESS OF 4 INCHES.

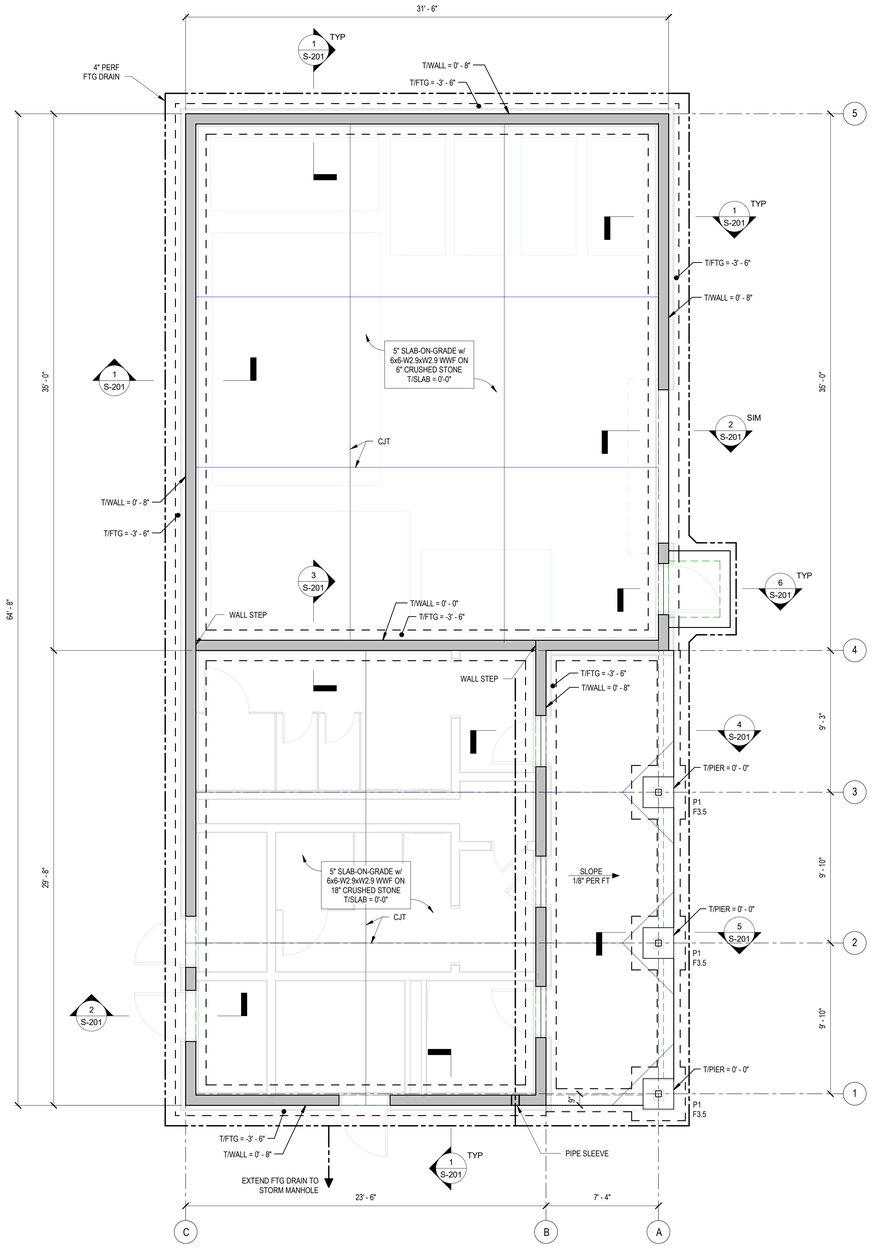

1 FOUNDATION PLAN
1/4" = 1'-0"

SCALE: 1/4" = 1'-0"

NOTES:

1. REFERENCE ELEVATION 0'-0" = FFE = 81.2'. SEE CIVIL DRAWINGS.
2. FOOTING ELEVATIONS ARE DENOTED ON PLAN AS EL (+OR-) FROM FFE. INDICATED ELEVATIONS ARE TOP OF FOOTING/WALL/PIER UNLESS OTHERWISE NOTED.
3. FS DENOTES FOOTING STEP.
4. COORDINATE UTILITY LOCATIONS WITH CIVIL DRAWINGS. STEP FOOTING AS NECESSARY TO MAINTAIN REQUIRED COVER ON UTILITY LINES.
5. FOR EXACT DOOR LOCATIONS AND ROUGH OPENING SIZES SEE ARCHITECTURAL DRAWINGS.

TYPICAL FOOTING SCHEDULE

MARK	DIMENSIONS			REINFORCEMENT
	LENGTH	WIDTH	THICKNESS	
F3.5	3' - 6"	3' - 6"	1' - 0"	(4) #5 BARS EACH WAY

Drawing Copyright © 2023

CHA
200 Corporate Place, Suite 110
Rocky Hill, CT 06067-1861
860.257.4557 . www.chacompanies.com

DeGennaro Engineering
40 Oregan Trail, Waterford, NY 12188
T: 518-633-1400

University of Hartford

University of Hartford
200 BLOOMFIELD AVE
WEST HARTFORD, CT 06117

PLAN NORTH

TRUE NORTH

NOT FOR CONSTRUCTION

IT IS A VIOLATION OF LAW FOR ANY PERSON, UNLESS THEY ARE ACTING UNDER THE DIRECTION OF A LICENSED PROFESSIONAL ENGINEER, ARCHITECT, LANDSCAPE ARCHITECT OR LAND SURVEYOR TO ALTER AN ITEM IN ANY WAY. IF AN ITEM BEARING THE STAMP OF A LICENSED PROFESSIONAL IS ALTERED, THE ALTERING ENGINEER, ARCHITECT, LANDSCAPE ARCHITECT OR LAND SURVEYOR SHALL STAMP THE DOCUMENT AND INCLUDE THE NOTATION "ALTERED BY" FOLLOWED BY THEIR SIGNATURE, THE DATE OF SUCH ALTERATION, AND A SPECIFIC DESCRIPTION OF THE ALTERATION.

UNIVERSITY OF HARTFORD ATHLETIC SPORTS COMPLEX

No.	Submittal / Revision	App'd.	By	Date

STRUCTURAL FOUNDATION & FRAMING PLANS

Designed By:	Drawn By:	Checked By:
DJD	DJD/EC	DJD
Issue Date:	Project No:	Scale:
1/13/2023	23001	AS SHOWN

Drawing No:

S-101

Central File: Update this text with Central file location
Saved: 1/13/2023 3:52:21 PM Current Local File: R22-Hartford Track-Structural_detached.rvt

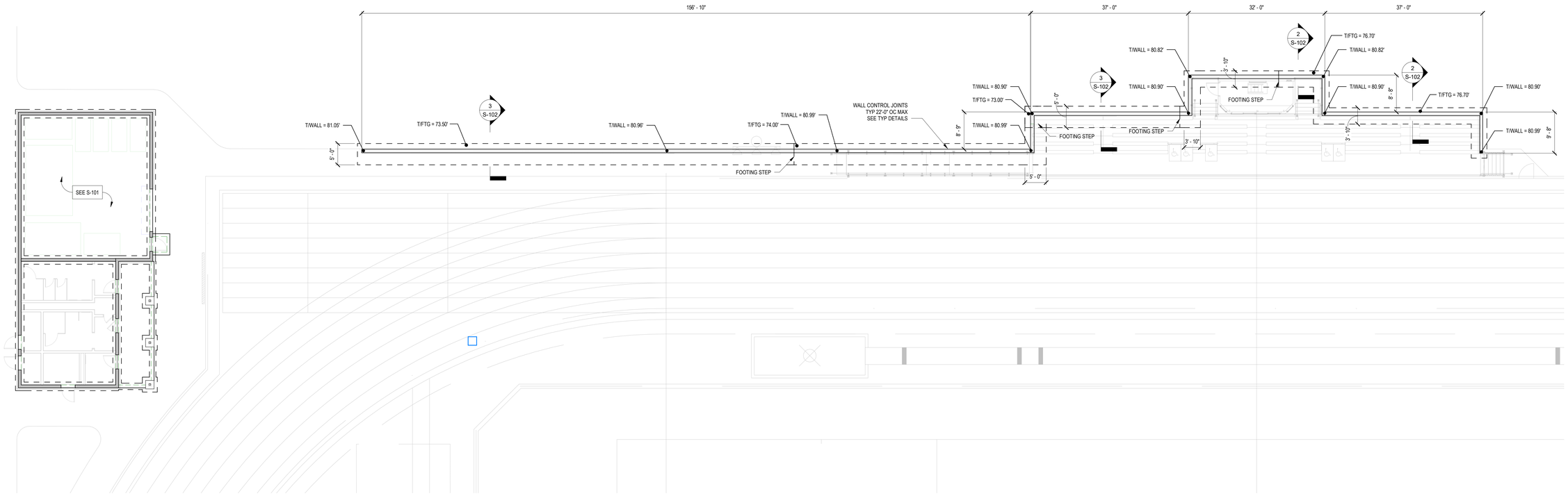

1 RETAINING WALL PLAN
1" = 10'-0"

0 5' 10' 20'
SCALE: 1" = 10'-0"

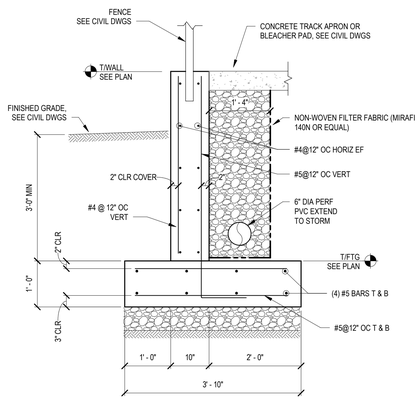

2 SHORT RETAINING WALL DETAIL
3/4" = 1'-0"

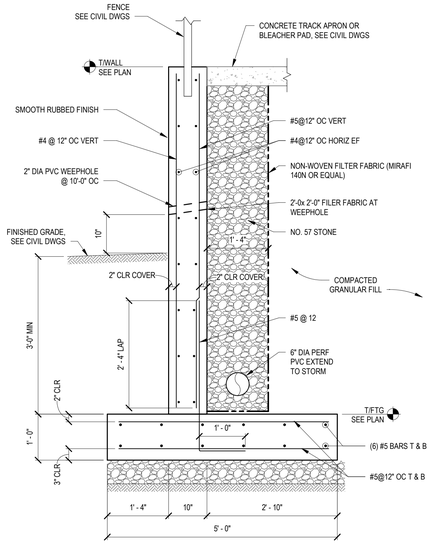

3 TALL RETAINING WALL SECTION
3/4" = 1'-0"

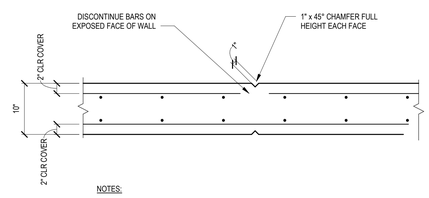

NOTES:

1. LOCATE AT WALL CONTROL JOINTS 22'-6" OC MAXIMUM.

4 TYP CONCRETE RETAINING WALL CONTROL JOINT DETAIL
1" = 1'-0"

Drawing Copyright © 2023

CHA
200 Corporate Place, Suite 110
Rocky Hill, CT 06067-1861
860.257.4557 . www.chacompanies.com

DeGennaro Engineering
40 Oregan Trail, Waterford, NY 12188
T: 518-633-1400

University of Hartford

University of Hartford

200 BLOOMFIELD AVE
WEST HARTFORD, CT 06117

PLAN NORTH

TRUE NORTH

NOT FOR CONSTRUCTION

IT IS A VIOLATION OF LAW FOR ANY PERSON, UNLESS THEY ARE ACTING UNDER THE DIRECTION OF A LICENSED PROFESSIONAL ENGINEER, ARCHITECT, LANDSCAPE ARCHITECT OR LAND SURVEYOR TO ALTER AN ITEM IN ANY WAY. IF AN ITEM BEARING THE STAMP OF A LICENSED PROFESSIONAL IS ALTERED THE ALTERING PROFESSIONAL ENGINEER, ARCHITECT, LANDSCAPE ARCHITECT OR SURVEYOR SHALL STAMP THE DOCUMENT AND INCLUDE THE NOTATION "ALTERED BY" FOLLOWED BY THEIR SIGNATURE, THE DATE OF SUCH ALTERATION, AND A SPECIFIC DESCRIPTION OF THE ALTERATION.

UNIVERSITY OF HARTFORD ATHLETIC SPORTS COMPLEX

No.	Submittal / Revision	App'd.	By	Date

ATHLETIC FIELD RETAINING WALL PLAN & SECTIONS

Designed By:	Drawn By:	Checked By:
DJD	DJD/EC	DJD
Issue Date:	Project No:	Scale:
1/13/2023	23001	AS SHOWN

Drawing No:

S-102

Central File: Update this text with Central file location
Saved: 1/13/2023 3:52:23 PM Current Local File: R22-Hartford Track-Structural_detached.rvt

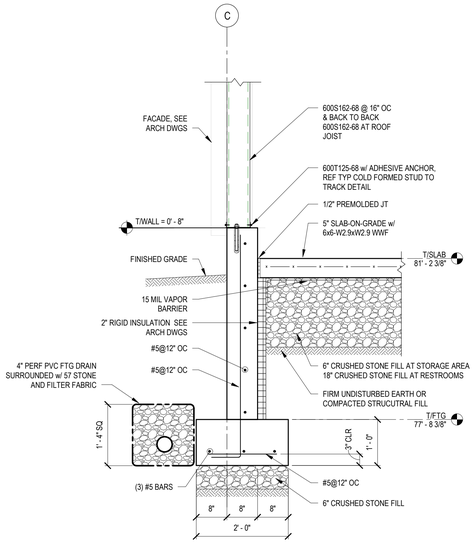

1 TYPICAL FOUNDATION SECTION
3/4" = 1'-0"

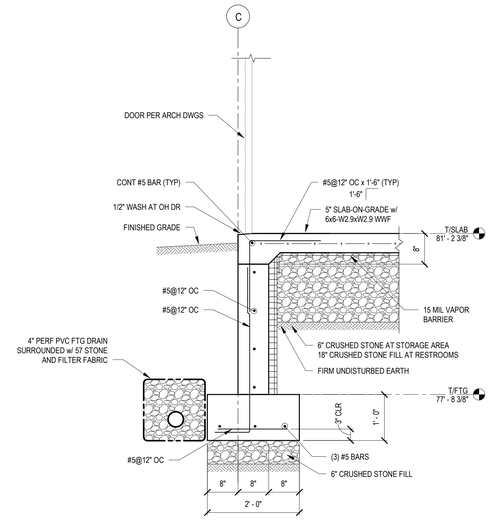

2 TYPICAL FOUNDATION SECTION AT DOOR
3/4" = 1'-0"

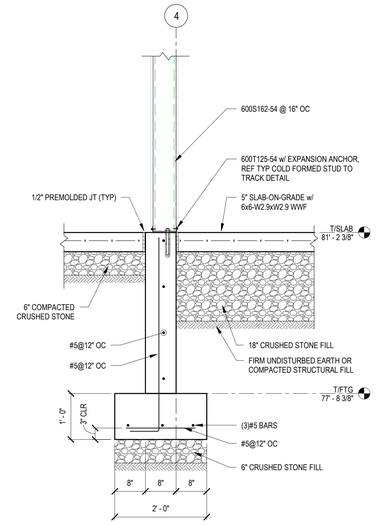

3 TYPICAL INTERIOR FOUNDATION SECTION
3/4" = 1'-0"

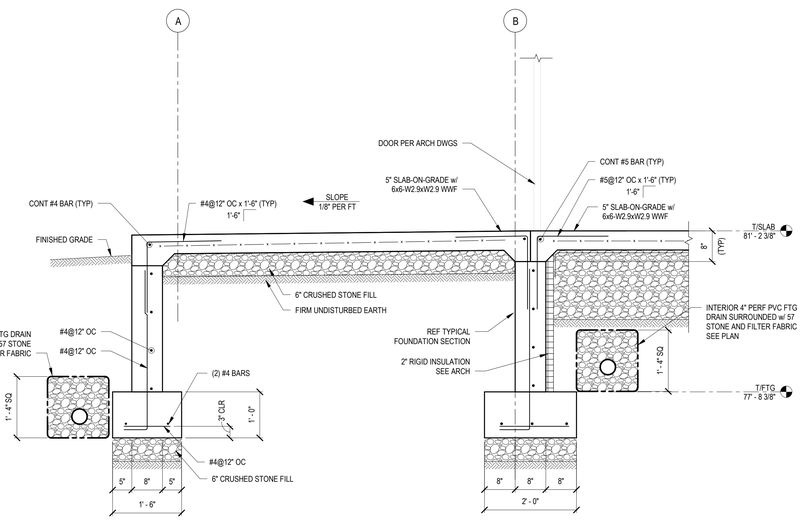

4 FOUNDATION SECTION AT EXTERIOR SLAB
3/4" = 1'-0"

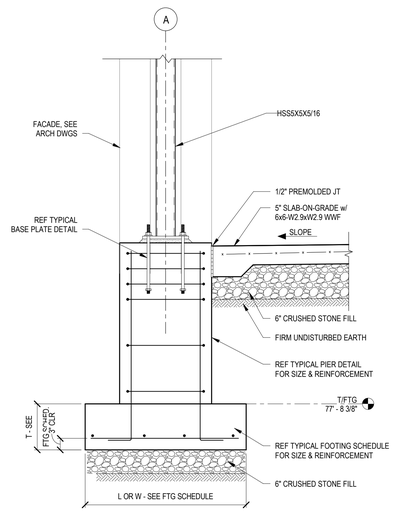

5 TYPICAL FOUNDATION SECTION AT PIER
3/4" = 1'-0"

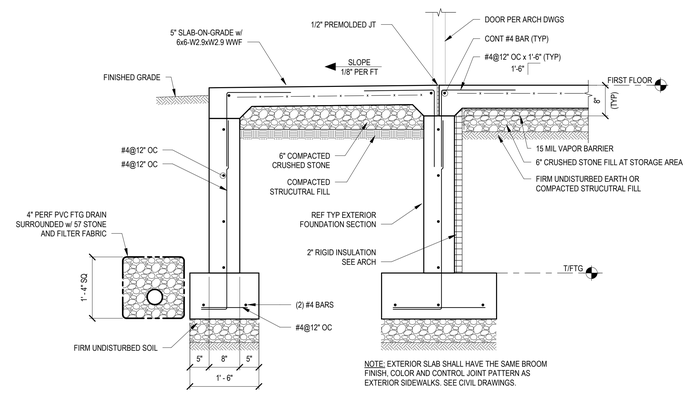

NOTE: EXTERIOR SLAB SHALL HAVE THE SAME BROOM FINISH, COLOR AND CONTROL JOINT PATTERN AS EXTERIOR SIDEWALKS. SEE CIVIL DRAWINGS.

6 TYPICAL EXTERIOR DOOR PAD SECTION
3/4" = 1'-0"

Drawing Copyright © 2023

CHA
200 Corporate Place, Suite 110
Rocky Hill, CT 06067-1861
860.257.4557 . www.chacompanies.com

DeGennaro Engineering
40 Oregan Trail, Waterford, NY 12188
T: 518-633-1400

University of Hartford

University of Hartford
200 BLOOMFIELD AVE
WEST HARTFORD, CT 06117

PLAN NORTH
TRUE NORTH

NOT FOR CONSTRUCTION

IT IS A VIOLATION OF LAW FOR ANY PERSON, UNLESS THEY ARE ACTING UNDER THE DIRECTION OF A LICENSED PROFESSIONAL ENGINEER, ARCHITECT, LANDSCAPE ARCHITECT OR LAND SURVEYOR TO ALTER AN ITEM IN ANY WAY. IF AN ITEM BEARING THE STAMP OF A LICENSED PROFESSIONAL IS ALTERED, THE ALTERING ENGINEER, ARCHITECT, LANDSCAPE ARCHITECT OR LAND SURVEYOR SHALL STAMP THE DOCUMENT AND INCLUDE THE NOTATION "ALTERED BY" FOLLOWED BY THEIR SIGNATURE, THE DATE OF SUCH ALTERATION, AND A SPECIFIC DESCRIPTION OF THE ALTERATION.

UNIVERSITY OF HARTFORD ATHLETIC SPORTS COMPLEX

No.	Submittal / Revision	App'd.	By	Date

FOUNDATION SECTIONS & DETAILS

Designed By:	Drawn By:	Checked By:
DJD	DJD/EC	DJD
Issue Date:	Project No:	Scale:
1/13/2023	23001	AS SHOWN

Drawing No:
S-201

Central File: Update this text with Central file location
Saved: 1/13/2023 3:32:23 PM Current Local File: R22-Hartford Track-Structural_detached.rvt

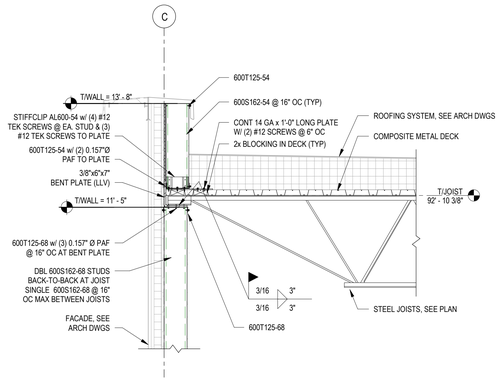

1 TYPICAL JOIST BEARING SECTION
3/4" = 1'-0"

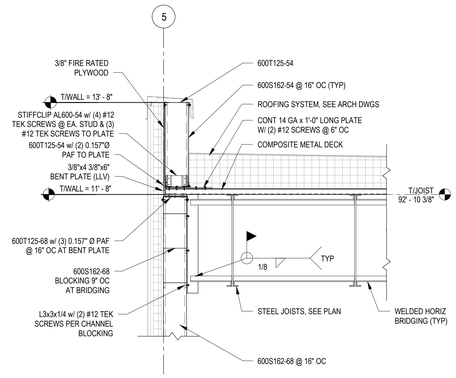

2 TYPICAL ROOF EDGE SECTION
3/4" = 1'-0"

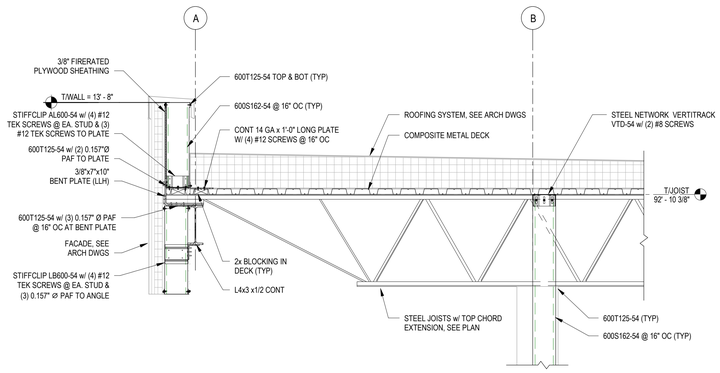

3 TYPICAL ROOF JOIST BEARING AT STEEL BEAM SECTION
3/4" = 1'-0"

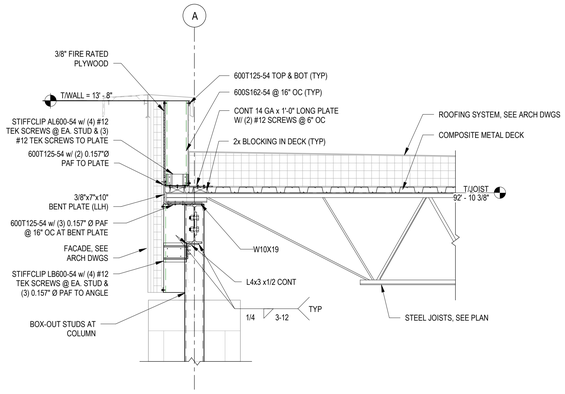

4 TYPICAL COLUMN SECTION
3/4" = 1'-0"

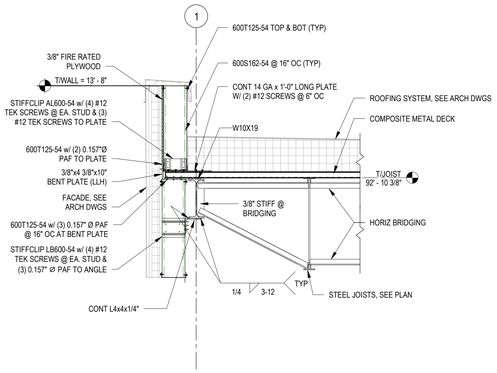

5 TYPICALROOF EDGE SECTION
3/4" = 1'-0"

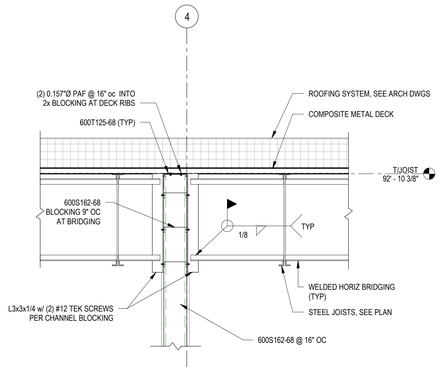

6 TYPICAL INTERIOR BEARING WALL SECTION
3/4" = 1'-0"

Drawing Copyright © 2023

CHA
200 Corporate Place, Suite 110
Rocky Hill, CT 06067-1861
860.257.4557 www.chacompanies.com

DeGennaro Engineering
40 Oregan Trail, Waterford, NY 12188
T: 518-633-1400

University of Hartford

University of Hartford

200 BLOOMFIELD AVE
WEST HARTFORD, CT 06117

PLAN NORTH

TRUE NORTH

NOT FOR CONSTRUCTION

IT IS A VIOLATION OF LAW FOR ANY PERSON, UNLESS THEY ARE ACTING UNDER THE DIRECTION OF A LICENSED PROFESSIONAL ENGINEER, ARCHITECT, LANDSCAPE ARCHITECT OR LAND SURVEYOR, TO ALTER AN ITEM IN ANY WAY. IF AN ITEM BEARING THE STAMP OF A LICENSED PROFESSIONAL IS ALTERED, THE ALTERING ENGINEER, ARCHITECT, LANDSCAPE ARCHITECT OR LAND SURVEYOR SHALL STAMP THE DOCUMENT AND INCLUDE THE NOTATION "ALTERED BY" FOLLOWED BY THEIR SIGNATURE, THE DATE OF SUCH ALTERATION, AND A SPECIFIC DESCRIPTION OF THE ALTERATION.

UNIVERSITY OF HARTFORD ATHLETIC SPORTS COMPLEX

No.	Submittal / Revision	App'd.	By	Date

FRAMING SECTIONS & DETAILS

Designed By:	Drawn By:	Checked By:
DJD	DJD/EC	DJD
Issue Date:	Project No:	Scale:
1/13/2023	23001	AS SHOWN

Drawing No:

S-202

Central File: Update this text with Central file location
Saved: 1/13/2023 3:52:25 PM Current Local File: R22-Hartford Track-Structural_detached.rvt

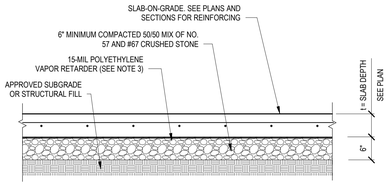

NOTES:

1. SEE PLAN AND RELATED DETAILS FOR SLAB REINFORCING REQUIREMENTS.
2. SUBGRADE SHALL BE PROOF-ROLLED. SEE NOTES SHEET S-001 AND GEOTECHNICAL REPORT.
3. PROVIDE VAPOR RETARDER UNDERNEATH ALL INTERIOR SLABS.

A TYP SLAB-ON-GRADE DETAIL
NTS

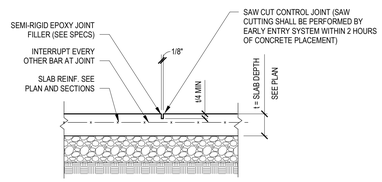

NOTES:

1. PROVIDE CONTROL JOINTS AS SHOWN IN PLAN.
2. NOTED ON PLAN AS CJT.

B TYP SLAB-ON-GRADE CONTROL JOINT DETAIL
NTS

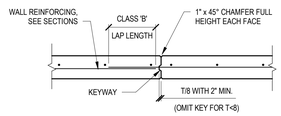

NOTES:

1. LOCATE AT WALL CONTROL JOINTS 45'-0" OC MAXIMUM, UNLESS NOTED OTHERWISE ON PLANS.
2. INTERRUPT ALTERNATE BARS AT JOINTS.

C TYP CONCRETE WALL CONSTRUCTION JOINT DETAIL (PLAN)
NTS

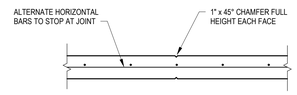

NOTES:

1. LOCATE AT WALL CONTROL JOINTS 22'-6" OC MAXIMUM, UNLESS NOTED OTHERWISE ON PLANS.
2. INTERRUPT ALTERNATE BARS AT JOINTS.

D TYP CONCRETE FOUNDATION WALL CONTROL JOINT DETAIL (PLAN)
NTS

ACI 318-14

REINFORCING LAP LENGTH
CONCRETE STRENGTH = 3,000 PSI

BAR SIZE	LAP CLASS	TOP	OTHER
#3	B	17"	13"
#4	B	23"	17"
#5	B	28"	22"
#6	B	34"	26"
#7	B	49"	38"
#8	B	56"	43"
#9	B	69"	53"
#10	B	85"	66"

NOTES:

1. TABLE TO BE INCLUDED ON ALL REINFORCING SHOP DRAWINGS.
2. TENSION DEVELOPMENT AND LAP SPLICE LENGTHS FOR BARS IN WALLS, SLABS, AND FOOTINGS.
3. FOR EPOXY COATED REBAR MULTIPLY LAP LENGTH VALUES BY 1.3.

E REINFORCING LAP LENGTH SCHEDULE
NTS

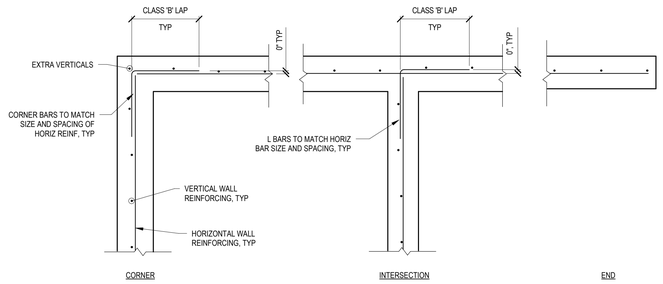

NOTE: DETAIL APPLES AT WALLS 8" OR SMALLER

F TYP. WALL REINFORCING AT BUILDINGS (PLAN)
NTS

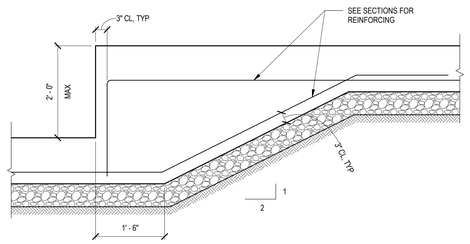

G TYP FOOTING STEP DETAIL
NTS

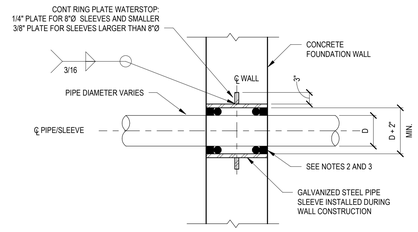

NOTES:

1. D = NOMINAL PIPE SIZE DIAMETER
2. SEAL GAP BETWEEN PIPE AND CONCRETE WALL WATER TIGHT WITH "LINK-SEAL" OR EQUAL.
3. REFERENCE CIVIL AND MECHANICAL DRAWINGS FOR QUANTITIES AND LOCATIONS.

H TYP PIPE SLEEVE THROUGH NEW WALL
NTS

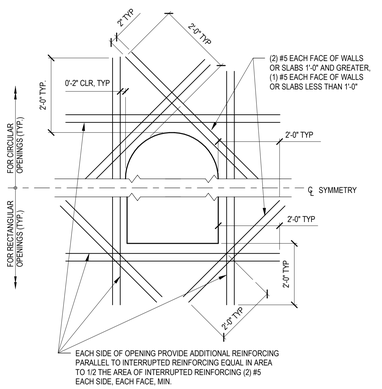

NOTES:

1. USE ABOVE REINFORCING AROUND ALL OPENINGS 1'-0" AND LARGER UNLESS NOTED OTHERWISE ON DRAWINGS. FOR OPENINGS LESS THAN 1'-0", NO ADDITIONAL REINFORCING IS REQUIRED. UNLESS NOTED OTHERWISE ON DRAWINGS.

J TYP REINFORCING AT OPENINGS IN SLABS AND WALLS
NTS

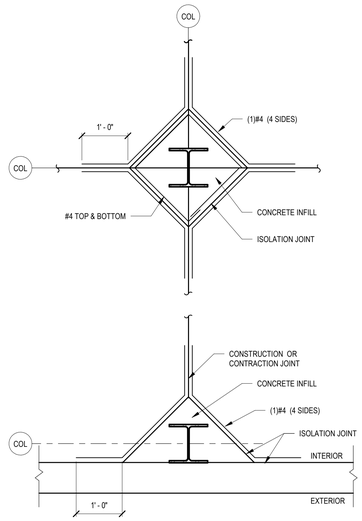

K TYP SLAB-ON-GRADE ISOLATION JOINT
NTS

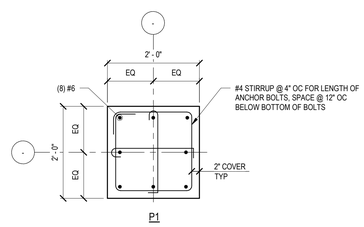

M TYPICAL PIER DETAIL
3/4" = 1'-0"

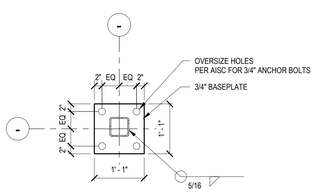

N TYPICAL COLUMN BASE PLATE DETAIL
NO SCALE

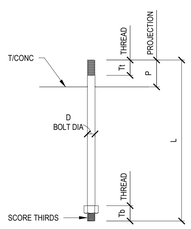

ANCHOR BOLT SCHEDULE

MARK	D	L	P	Tt	Tb
AB-1	3/4"	18"	4"	2 1/2"	2"
AB-2	1"	24"	4"	2 1/2"	2"
AB-3	1 1/4"	28"	5"	2 1/2"	2"

NOTE: PROVIDE WITH ANCHOR BOLTS, HEAVY HEX NUTS W/ FLAT WASHERS (5/16" MIN THICKNESS)

O TYP ANCHOR BOLT DETAIL
NTS

Drawing Copyright © 2023

CHA
200 Corporate Place, Suite 110
Rocky Hill, CT 06067-1861
860.257.4557 www.chacompanies.com

DeGennaro Engineering
40 Oregan Trail, Waterford, NY 12188
T: 518-633-1400

University of Hartford

University of Hartford
200 BLOOMFIELD AVE
WEST HARTFORD, CT 06117

PLAN NORTH
TRUE NORTH

NOT FOR CONSTRUCTION

IT IS A VIOLATION OF LAW FOR ANY PERSON, UNLESS THEY ARE ACTING UNDER THE DIRECTION OF A PROFESSIONAL ENGINEER, ARCHITECT, LANDSCAPE ARCHITECT OR LAND SURVEYOR TO ALTER AN ITEM IN ANY WAY. IF AN ITEM BEARING THE STAMP OF A LICENSED PROFESSIONAL IS ALTERED, THE ALTERING ENGINEER, ARCHITECT, LANDSCAPE ARCHITECT OR LAND SURVEYOR SHALL STAMP THE DOCUMENT AND INCLUDE THE NOTATION "ALTERED BY" FOLLOWED BY THEIR SIGNATURE, THE DATE OF SUCH ALTERATION, AND A SPECIFIC DESCRIPTION OF THE ALTERATION.

UNIVERSITY OF HARTFORD ATHLETIC SPORTS COMPLEX

No.	Submittal / Revision	App'd	By	Date

TYPICAL CONCRETE SECTIONS & DETAILS

Designed By:	Drawn By:	Checked By:
DJD	DJD/EC	DJD
Issue Date:	Project No:	Scale:
1/13/2023	23001	AS SHOWN

Drawing No:
S-301

Central File: Update this text with Central file location
Saved: 1/13/2023 3:32:23 PM Current Local File: R22-Hartford Track-Structural_detached.rvt

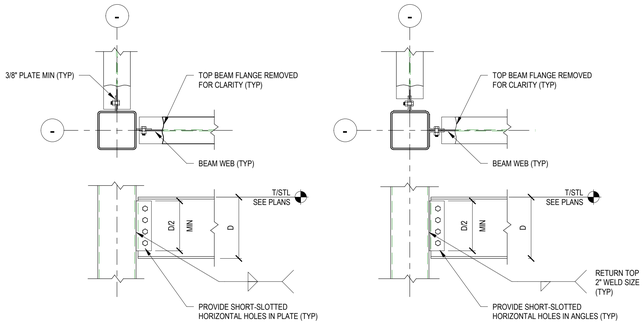

NOTES:
1. DESIGN DOUBLE-ANGLE CONNECTION TO DEVELOP BEAM REACTION.

(A) TYP BEAM-HSS COLUMN CONNECTION DETAILS
NTS

MINIMUM NUMBER OF BOLTS IN SHEAR TAB FOR BEAM CONNECTIONS	
W6	2
W8	2
W10	2
W12	3
W14	3
W16	4
W18	4
C8	2
C10	2

NOTE: ALL BOLTS SHALL BE 3/4"Ø A325N BOLTS UNO.

(B) MIN BOLT NUMBER TABLE
NTS

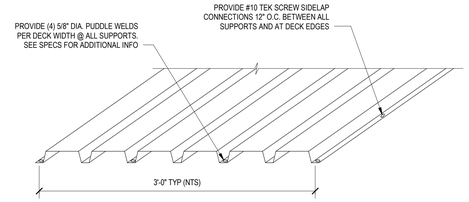

(C) TYP DECK CONNECTION DETAIL
NTS

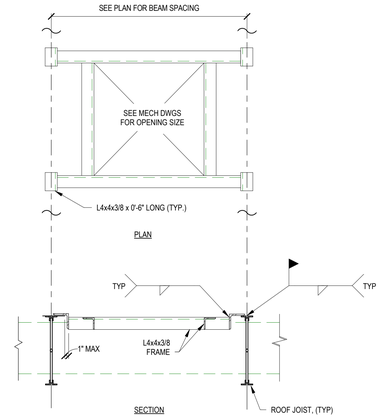

(D) TYP DECK OPENING DETAIL
NTS

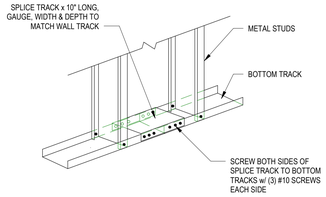

(E) TYP COLD FORMED TRACK SPLICE DETAIL
NTS

COLD FORMED METAL STUD LEGEND

MEMBER DEPTH:
ALL MEMBER DEPTHS ARE TAKEN IN 1/100" (EXAMPLE: 6" = 600 x 1/100"). FOR ALL "T" SECTIONS MEMBER DEPTH IS THE INSIDE TO INSIDE DIMENSION.

FLANGE WIDTH:
ALL FLANGE WIDTHS ARE TAKEN IN 1/100" (EXAMPLE: 1 5/8" = 1.525 = 162 x 1/100").

600 S 162 - 54

STYLE:
ALPHA CHARACTERS UTILIZED BY THE DESIGNATOR SYSTEM ARE:

S - STUD OR JOIST SECTIONS
SG - SIGMASTUD SECTIONS (BY THE STEEL NETWORK)
JS - JAMSTUD SECTIONS (BY THE STEEL NETWORK)
T - TRACK SECTIONS
SGT - SIGMATRAK SECTIONS (BY THE STEEL NETWORK)
U - CHANNEL SECTIONS
F - FURRING CHANNEL SECTIONS

MATERIAL THICKNESS:
MATERIAL THICKNESS IS THE MINIMUM BASE METAL THICKNESS IN MILS. MINIMUM BASE METAL THICKNESS REPRESENTS 95% OF THE DESIGN THICKNESS.
(EXAMPLE: 0.054" = 54 MILS; 1 MIL = 1/100").

COLD FORMED METAL FRAMING MATERIAL THICKNESS		
GAUGE	MILS	DESIGN THICKNESS (IN)
10	118	0.1242
12	97	0.1017
14	68	0.0713
16	54	0.0566
18	43	0.0451
20	33	0.0346
22	27	0.0283

(F) COLD FORMED METAL STUD LEGEND
NTS

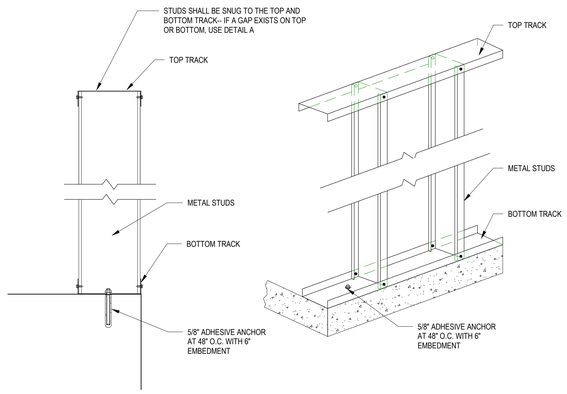

(G) TYP COLD FORMED STUD TO TRACK DETAIL
NTS

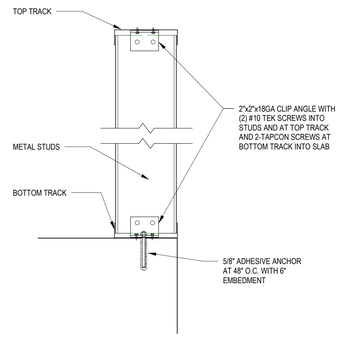

NOTES:
1. USE THIS DETAIL WHEN A GAP EXISTS BETWEEN THE METAL STUD AND TOP OR BOTTOM TRACK.

(H) TYP COLD FORMED STUD TO TRACK DETAIL A
NTS

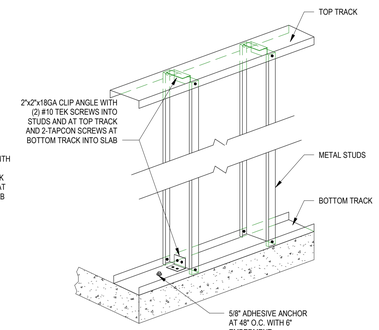

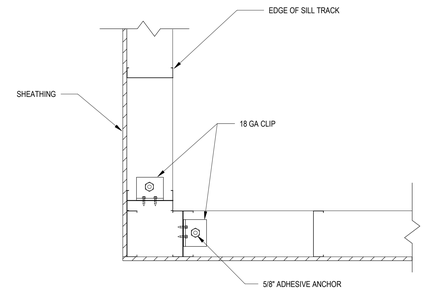

(K) TYP COLD FORMED STUD CORNER DETAIL
NTS

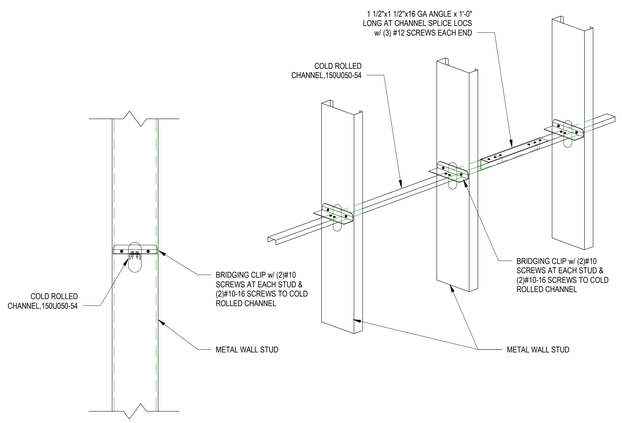

(L) TYP COLD FORMED FRAMING BRIDGING DETAIL
NTS

METAL STUD HEADER SCHEDULE

SPAN	HEADER	# OF JACK STUDS
UP TO 4 FT	DBL 800S162-97	1
4 FT TO 12 FT	W10x26 w/ 16 GA TRACKS	2

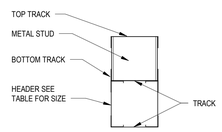

SECTION A-A

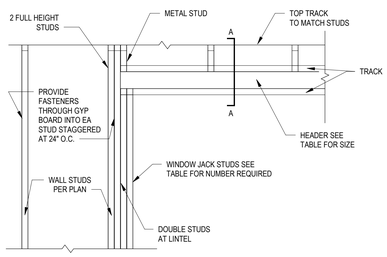

(M) TYP COLD FORMED STUD HEADER DETAIL
NTS

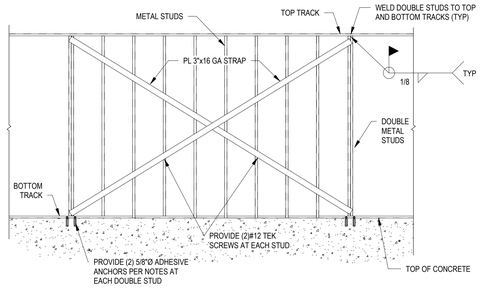

(N) TYP COLD FORMED METAL STUD X-BRACING DETAIL
NTS

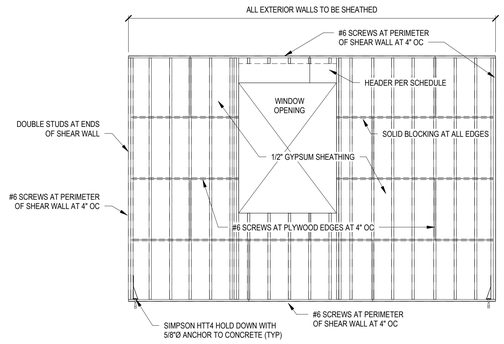

(P) TYP COLD FORMED SHEAR WALL FRAMING DETAIL
NTS

Drawing Copyright © 2023

CHA
200 Corporate Place, Suite 110
Rocky Hill, CT 06067-1861
860.257.4557 . www.chacompanies.com

DeGennaro Engineering
40 Oregan Trail, Waterford, NY 12188
T: 518-633-1400

University of Hartford

University of Hartford
200 BLOOMFIELD AVE
WEST HARTFORD, CT 06117

PLAN NORTH
TRUE NORTH

NOT FOR CONSTRUCTION

IT IS A VIOLATION OF LAW FOR ANY PERSON, UNLESS THEY ARE ACTING UNDER THE DIRECTION OF A LICENSED PROFESSIONAL ENGINEER, ARCHITECT, LANDSCAPE ARCHITECT OR LAND SURVEYOR TO ALTER AN ITEM IN ANY WAY. IF AN ITEM BEARING THE STAMP OF A LICENSED PROFESSIONAL IS ALTERED, THE ALTERING ENGINEER, ARCHITECT, LANDSCAPE ARCHITECT OR LAND SURVEYOR SHALL ATTACH TO THE ITEM THE PHRASE "ALTERED BY" FOLLOWED BY THEIR SIGNATURE, THE DATE OF SUCH ALTERATION, AND A SPECIFIC DESCRIPTION OF THE ALTERATION.

UNIVERSITY OF HARTFORD ATHLETIC SPORTS COMPLEX

No.	Submittal / Revision	App'd	By	Date

TYPICAL STEEL SECTIONS & DETAILS

Designed By: DJD	Drawn By: DJD/EC	Checked By: DJD
Issue Date: 1/13/2023	Project No: 23001	Scale: AS SHOWN

Drawing No:
S-302

Central File: Update this text with Central file location
Saved: 1/13/2023 3:52:25 PM Current Local File: R22-Hartford Track-Structural_detached.rvt

Central File: Update this text with Central file location
Saved: 1/13/2023 10:27:23 AM Current Local File: C:\Users\5737\Documents\059815 - Mech - R22_asmith3WK4W.rvt

EXHAUST FAN SCHEDULE

TAG	LOCATION	SERVICE	TYPE	CFM	TSP (IN WG)	OPERATING POWER (HP)	FAN MOTOR DATA				"BASIS OF DESIGN" MANUFACTURER & MODEL#	WEIGHT (LBS)	REMARKS
							RPM	HP	VOLT	PH			
EF-1	TRACK STORAGE (101)	SEE PLANS	INLINE	70	0.35	0.03	1,550	$\frac{1}{10}$	120	1	GREENHECK	50	1

1. PROVIDE WITH ISOLATION KIT
2. PROVIDE NEMA R DISCONNECT SWITCH

LOUVER SCHEDULE

TAG	LOCATION	TYPE	CFM	WIDTH (IN)	HEIGHT (IN)	VELOCITY	MATERIAL	FINISH	MANUFACTURER & MODEL# (BASIS OF DESIGN)	REMARKS
L-1	TRACK STORAGE (101)	INTAKE	580	16	16	<800 FPM	ALUMINUM	MILL	RUSKIN #ELF375DX	STATIONARY DRAINABLE LOUVER, 6" DEPTH, PROVIDE BIRDSCREEN
L-2	TRACK STORAGE (101)	EXHAUST	650	16	16	<1000 FPM	ALUMINUM	MILL	RUSKIN #ELF375DX	STATIONARY DRAINABLE LOUVER, 46" DEPTH, PROVIDE BIRDSCREEN

REMARK:
1. COORDINATE COLOR SELECTION WITH ARCHITECT.

ELECTRIC DUCT HEATER SCHEDULE

TAG	LOCATION	SERVICE	MOUNT	DUCT SIZE (WxH)	CFM	HEATING COIL			ELECTRICAL DATA						MANUFACTURER & MODEL# (BASIS OF DESIGN)	REMARKS
						EAT (°F)	LAT (°F)	CAPACITY (kW)	VOLT	PHASE	HZ	FLA	MCA	MOPD		
H-1	SEE PLANS	TRACK STORAGE (101)	SLIP-IN	10X10	580	54.8	80	11.5	120	1	60	8.33	10.41	15	RENEWAIRE #EK-0808001SCCHR--11-1SV-N	1, 2

1. PROVIDE MANUFACTURER'S STANDARD DUCT THERMOSTAT AND DUCT SENSOR.
2. PROVIDE MODULATING HEATING OUTPUT (SCR CONTROL).

REGISTER, GRILLE AND DIFFUSER SCHEDULE

TAG	LOCATION	SERVICE	TYPE	CFM	FACE SIZE	NECK SIZE	PATTERN	APD (IN WG)	MAX NC	MANUFACTURER & MODEL#	REMARKS
SD-1	SEE PLANS	SUPPLY	DIFFUSER	300	24X24	8" DIA.	4-WAY	0.097	<25	TITUS TMSA	
SD-2	SEE PLANS	SUPPLY	DIFFUSER	100	12X12	6" DIA.	4-WAY	0.097	<25	TITUS TMSA	
EG-1	SEE PLANS	EXHAUST	GRILLE	300	24X24	8X8	PERFORATED	0.08	<25	TITUS PDR	
EG-2	SEE PLANS	EXHAUST	GRILLE	100	12X12	6X6	PERFORATED	0.08	<25	TITUS PDR	

ENERGY RECOVERY VENTILATOR SCHEDULE

TAG	LOCATION	TYPE	EA CFM	OA CFM	SUPPLY FAN MOTOR DATA				RETURN OR EXHAUST FAN MOTOR DATA				STATIC PLATE HEAT EXCHANGER PERFORMANCE														MANUFACTURER & MODEL# (BASIS OF DESIGN)	REMARKS
														WINTER							ELECTRICAL DATA						
					ESP (IN WG)	FAN TYPE	BHP	WATTS	ESP (IN WG)	FAN TYPE	BHP	WATTS	AIR TYPE	EDB	EWB	LDB	LWB	SENSIBLE EFFECTIVENESS (%)	TOTAL EFFECTIVENESS (%)	TOTAL ENERGY SAVED (MBH)	VOLT	PH	FLA PER MOTOR	MCA PER MOTOR	MOP PER MOTOR		
ERU	TRACK STORAGE (101)	STATIC PLATE	620	580	.50	DIRECT DRIVE	0.50	300	0.50	DIRECT DRIVE	0.50	300	RA/ EA AIR	68.0	53.8	-	-	50	50	18.8	208	1	4.8	10.8	15	RENEWAIRE HEX1XINH	1, 2, 3, 4, 5, 6, 7, 8, 9
													OA/ SA AIR	7.0	4.6	37.0	29.0										

REMARKS:
1. PROVIDE WITH 2" PLEATED MERV-13 PREFILTER
2. PERFORMANCE BASED ON EXHAUST ROOM AIR TEMPERATURES: WINTER ROOM TEMP OF 70°F DB/50°F WB & SUMMER ROOM TEMP OF 75°F DB/63°F WB
3. PROVIDE MOTORIZED ISOLATION DAMPERS ON OUTSIDE AIR INTAKE AND EXHAUST AIR DISCHARGE
4. INTEGRATED PROGRAMMABLE CONTROLS
5. BYPASS ECONOMIZER DAMPER
6. DOUBLE WALL CONSTRUCTION
7. MOTORIZED ISOLATION DAMPER
8. SPEED CONTROL
9. WALL MOUNT CONTROLS

MECHANICAL ABBREVIATIONS

ABS	ABSOLUTE
AC	ALTERNATING CURRENT
AD	ACCESS DOOR
AFF	ABOVE FINISH FLOOR
BHP	BRAKE HORSEPOWER
BOD	BOTTOM OF DUCT
CAP	CAPACITY
CD	CONDENSATE DRAIN
CFM	CUBIC FEET PER MINUTE
CLG	CEILING
dB	DECIBEL
DB	DRY BULB
DN	DOWN
EA	EXHAUST AIR
EAT	ENTERING AIR TEMPERATURE
EC	ELECTRICAL CONTRACTOR
EDB	ENTERING DRY BULB TEMPERATURE
ELEV	ELEVATION
ESP	EXTERNAL STATIC PRESSURE
EWB	ENTERING WET BULB TEMPERATURE
FAI	FRESH AIR INTAKE
FD	FIRE DAMPER
FF	FINISH FLOOR
FLA	FULL LOAD AMPS
FLR	FLOOR
FT	FOOT / FEET
FT HD	FEET OF HEAD
GA	GAUGE OR GAGE
HC	HEATING CONTRACTOR
HP	HORSEPOWER OR HEAT PUMP
HZ	HERTZ
IN	INCHES
INV	INVERT
IN WG	INCHES WATER GAUGE
KW	KILOWATTS
LAT	LEAVING AIR TEMPERATURE
LDB	LEAVING DRY BULB TEMPERATURE
LF	LINEAR FEET OR FOOT
LWB	LEAVING WET BULB TEMPERATURE
MAX	MAXIMUM
MBH	BTU PER HOUR (THOUSAND)
MCA	MINIMUM CIRCUIT AMPS
MIN	MINIMUM
MIN SP	MINIMUM STATIC PRESSURE
MOCP	MAXIMUM OVERCURRENT PROTECTION
MTG HGT	MOUNTING HEIGHT
MO	MASONRY OPENING
N/A	NOT APPLICABLE
NC	NOISE CRITERIA
N C	NORMALLY CLOSED
NIC	NOT IN CONTRACT
N O	NORMALLY OPEN
NTS	NOT TO SCALE
OA	OUTSIDE AIR
PC	PLUMBING CONTRACTOR
PD	PRESSURE DROP
PH	PHASE
RA	RETURN AIR
RH	RELATIVE HUMIDITY
RPM	REVOLUTIONS PER MINUTE
SA	SUPPLY AIR
SHC	SENSIBLE HEAT CAPACITY
SMBH	SENSIBLE MBH
SP	STATIC PRESSURE
TD OR ΔT	TEMPERATURE DIFFERENCE
TMBH	TOTAL MBH
TSP	TOTAL STATIC PRESSURE
TYP	TYPICAL
UNO	UNLESS NOTED OTHERWISE
VD	VOLUME DAMPER
VOLT	VOLTAGE
W	WATT
WB	WET BULB
WG	WATER GAGE
°F	DEGREES FAHRENHEIT
&	AND
#	NUMBER

MECHANICAL LINE-TYPES (ONE-LINE)

12"x12" SA	SUPPLY AIR DUCTWORK (SIZE AS INDICATED)
12"x12" RA	RETURN AIR DUCTWORK (SIZE AS INDICATED)
12"x12" EA	EXHAUST AIR DUCTWORK (SIZE AS INDICATED)
12"x12" OA	OUTSIDE AIR DUCTWORK (SIZE AS INDICATED)

MECHANICAL LINE-TYPES (TWO-LINE)

12"x12" SA	SUPPLY AIR DUCTWORK (SIZE AS INDICATED)
12"x12" RA	RETURN AIR DUCTWORK (SIZE AS INDICATED)
12"x12" EA	EXHAUST AIR DUCTWORK (SIZE AS INDICATED)
12"x12" OA	OUTSIDE AIR DUCTWORK (SIZE AS INDICATED)

MECHANICAL CONTROL SYMBOLS (ONE-LINE)

P	DUCT STATIC PRESSURE SENSOR
S/S	START / STOP
CS	CURRENT SENSOR
DPS	DIFFERENTIAL PRESSURE SENSOR
H	HUMIDISTAT / HUMIDITY SENSOR
SP	STATIC PRESSURE SENSOR
AFM	AIRFLOW MEASURING STATION
OAM	OUTDOOR AIR MONITOR
TE	TEMPERATURE ELEMENT
UCP	UNIT CONTROL PANEL
T	THERMOSTAT
AO	ANALOG OUTPUT
AI	ANALOG INPUT
BO	BINARY OUTPUT
BI	BINARY INPUT

MECHANICAL SYMBOLS

	SUPPLY AIR DUCT UP
	RETURN / OUTSIDE AIR DUCT UP
	EXHAUST AIR DUCT UP
	SUPPLY AIR DUCT DOWN
	RETURN / OUTSIDE AIR DUCT DOWN
	EXHAUST AIR DUCT DOWN
	FLEXIBLE DUCT CONNECTION
VD	VOLUME CONTROL DAMPER IN DUCT
	SUPPLY / OUTSIDE AIR SIDEWALL REGISTER / GRILLE
	RETURN / EXHAUST AIR SIDEWALL REGISTER / GRILLE
M	MOTOR OPERATED DAMPER IN DUCT
	AIRFLOW ARROW

DUCTWORK FITTING STANDARDS

THE FOLLOWING INDICATE THE STANDARD FOR DUCTWORK FITTINGS REQUIRED FOR THIS PROJECT

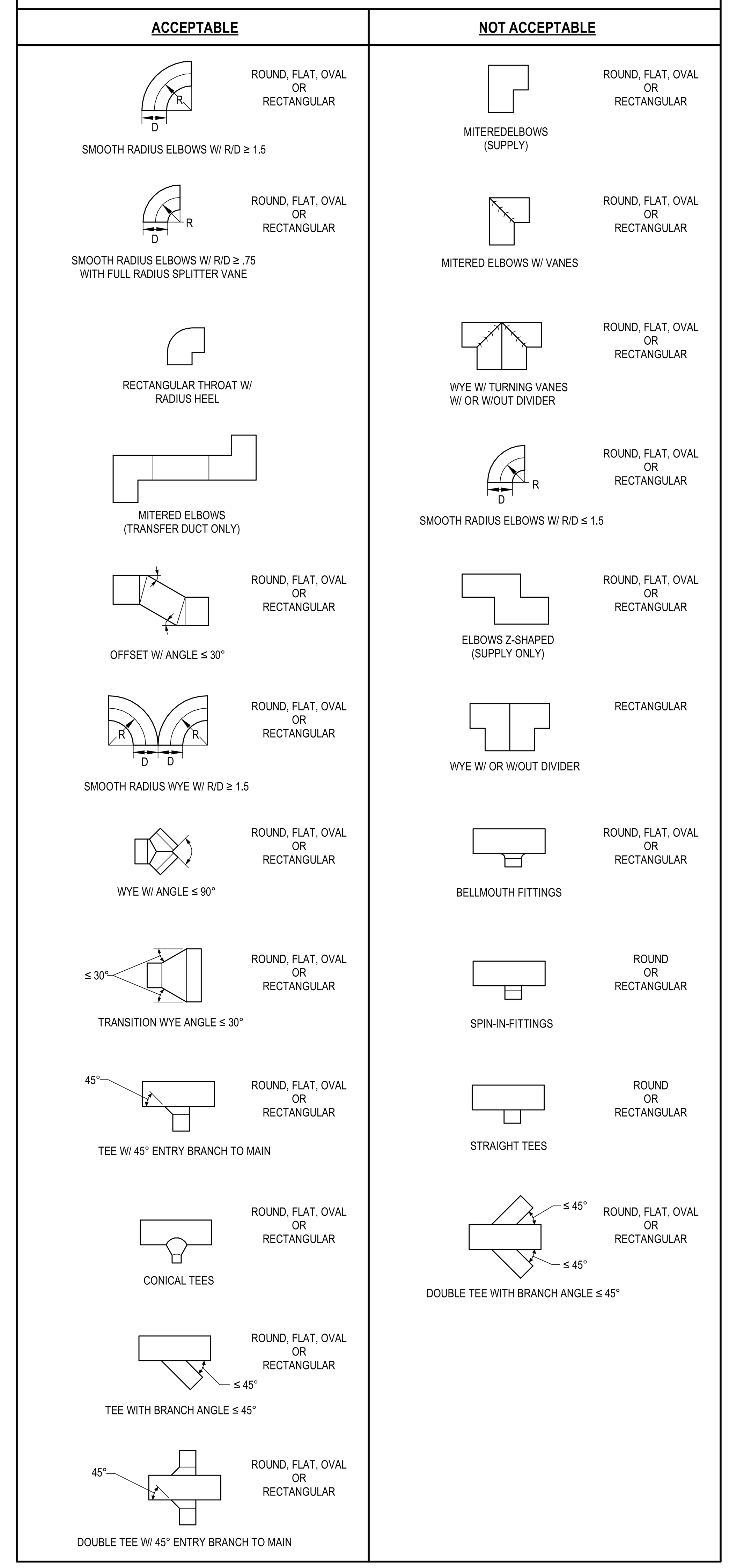

Drawing Copyright © 2023

CHA
200 Corporate Place, Suite 110
Rocky Hill, CT 06067-1861
860.257.4557 . www.chacompanies.com

DeGennaro Engineering
40 Oregan Trail, Waterford, NY 12188
T: 518-633-1400

UNIVERSITY OF HARTFORD
200 BLOOMFIELD AVE
WEST HARTFORD, CT 06117

PLAN NORTH — TRUE NORTH

NOT FOR CONSTRUCTION

IT IS A VIOLATION OF LAW FOR ANY PERSON, UNLESS THEY ARE ACTING UNDER THE DIRECTION OF A LICENSED PROFESSIONAL ENGINEER, ARCHITECT, LANDSCAPE ARCHITECT OR LAND SURVEYOR TO ALTER AN ITEM IN ANY WAY. IF AN ITEM BEARING THE STAMP OF A LICENSED PROFESSIONAL IS ALTERED, THE ALTERING ENGINEER, ARCHITECT, LANDSCAPE ARCHITECT OR LAND SURVEYOR SHALL STAMP THE DOCUMENT AND INCLUDE THE NOTATION "ALTERED BY" FOLLOWED BY THEIR SIGNATURE, THE DATE OF SUCH ALTERATION, AND A SPECIFIC DESCRIPTION OF THE ALTERATION.

UNIVERSITY OF HARTFORD ATHLETIC SPORTS COMPLEX

No.	Submittal / Revision	App'd.	By	Date

LEGEND, ABBREVIATOINS, SYMBOLS, AND SCHEDULES

Designed By: ATS	Drawn By: KMH	Checked By: JAL
Issue Date: 01/13/2023	Project No: 059815	Scale: AS SHOWN

Drawing No:
M-001

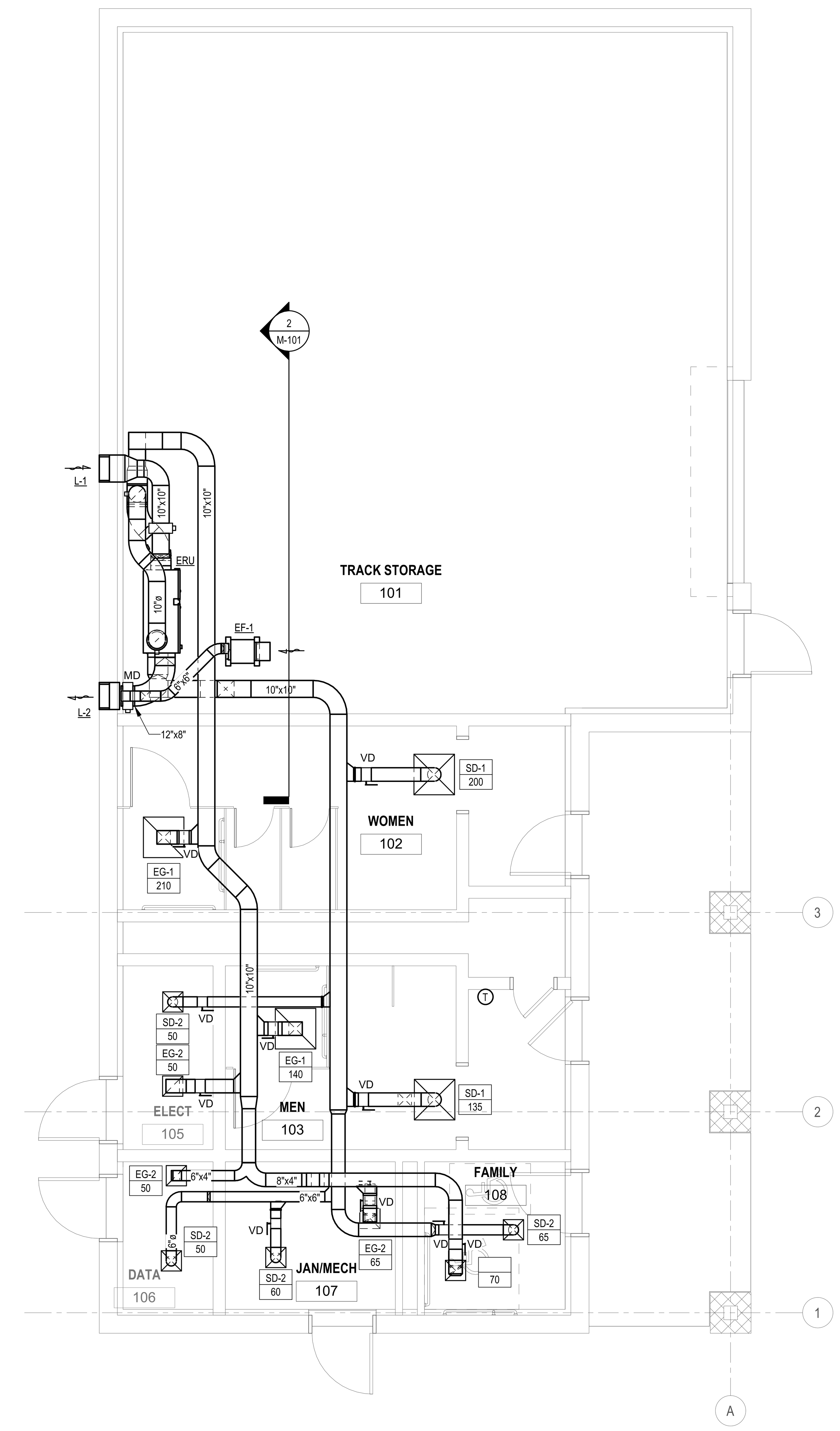

1 MECHANICAL FIRST FLOOR DUCTWORK PLAN

1/4" = 1'-0"

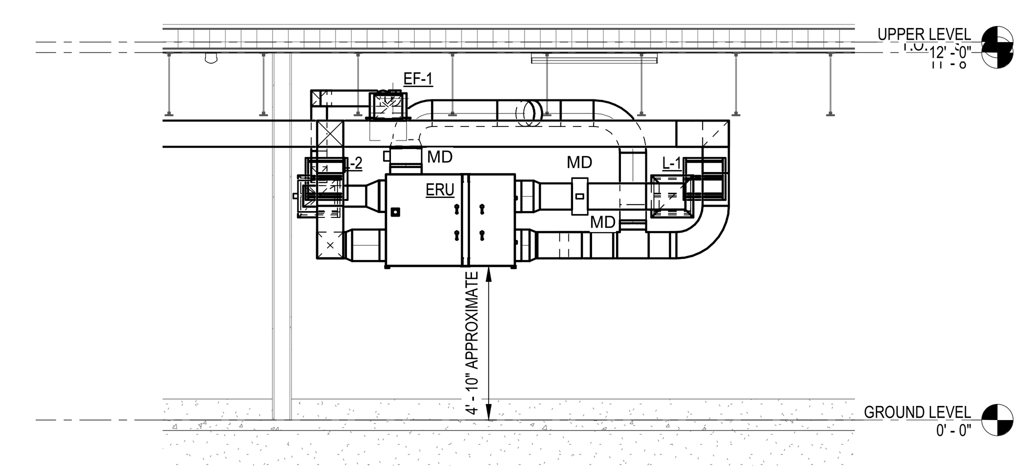

2 MECHANICAL WEST

1/4" = 1'-0"

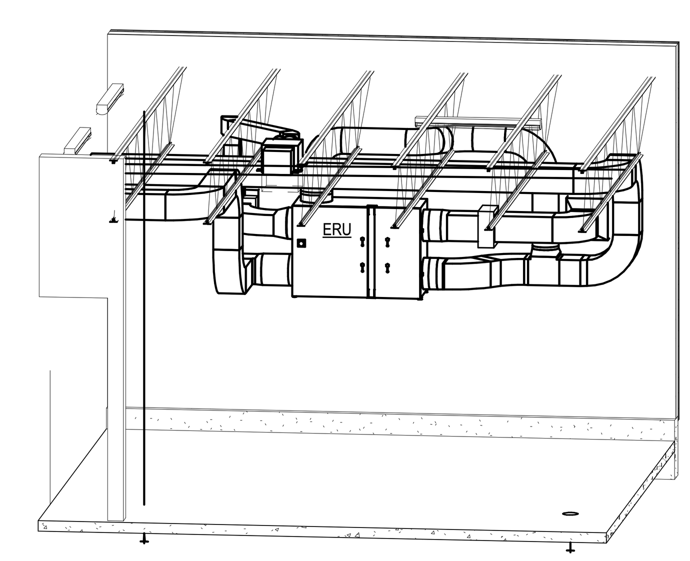

3 MECHANICAL ISOMETRIC

NOT TO SCALE

Drawing Copyright © 2023

CHA
200 Corporate Place, Suite 110
Rocky Hill, CT 06067-1861
860.257.4557 · www.chacompanies.com

DeGennaro Engineering
40 Oregan Trail, Waterford, NY 12188
T: 518-633-1400

University of Hartford

UNIVERSITY OF HARTFORD

200 BLOOMFIELD AVE
WEST HARTFORD, CT 06117

PLAN NORTH

TRUE NORTH

NOT FOR CONSTRUCTION

IT IS A VIOLATION OF LAW FOR ANY PERSON, UNLESS THEY ARE ACTING UNDER THE DIRECTION OF A LICENSED PROFESSIONAL ENGINEER, ARCHITECT, LANDSCAPE ARCHITECT OR LAND SURVEYOR TO ALTER AN ITEM IN ANY WAY. IF AN ITEM BEARING THE STAMP OF A LICENSED PROFESSIONAL IS ALTERED, THE ALTERING ENGINEER, ARCHITECT, LANDSCAPE ARCHITECT OR LAND SURVEYOR SHALL STAMP THE DOCUMENT AND INCLUDE THE NOTATION "ALTERED BY" FOLLOWED BY THEIR SIGNATURE, THE DATE OF SUCH ALTERATION, AND A SPECIFIC DESCRIPTION OF THE ALTERATION.

UNIVERSITY OF HARTFORD ATHLETIC SPORTS COMPLEX

No.	Submittal / Revision	App'd	By	Date

MECHANICAL PLAN

Designed By: ATS	Drawn By: KMH	Checked By: JAL
Issue Date: 01/13/2023	Project No: 059815	Scale: AS SHOWN

Drawing No:

M-101

Central File: Update this text with Central file location
Saved: 1/13/2023 10:27:24 AM Current Local File: C:\Users\5737\Documents\059815 - Mech - R22_asmith3WK4W.rvt

BACKFLOW PREVENTER SCHEDULE

TAG	LOCATION	CROSS CONNECTION	TYPE	INLET/OUTLET (IN.)	MANUFACTURER & MODEL#	NOTES
BFP	ELEC (105)	POTABLE SUPPLY	REDUCED PRESSURE ZONE	1-1/2"	ZURN 975XL2	

REMARKS:
1. PROVIDE BACKFLOW PREVENTION DEVICE ASSEMBLY IN COMPLIANCE WITH THE REQUIREMENTS OF NEW YORK DEPARTMENT OF ENVIRONMENTAL PROTECTION - CROSS CONNECTION CONTROL.
2. FOLLOWING ISSUANCE OF APPROVAL OF PLAN SUBMISSION AND INSTALLATION, PROVIDE TESTING BY A CERTIFIED TESTER. SUBMIT TEST RESULTS AND CERTIFICATION (DOH-1013 FORM) TO APPROVING AGENT FOR ISSUANCE OF A COMPLETED WORKS APPROVAL

INSTANTANEOUS WATER HEATER SCHEDULE

TAG	SERVICE	TYPE	RATE (GPM)	TEMP RISE (°F)	TEMP SETPOINT (°F)	ELECTRICAL DATA				MANUFACTURER & MODEL#	NOTES
						VOLTS	PH	kW	AMPS		
EWH-1,2,3,4	LAVATORIES	ELECTRIC TANKLESS	0.5	65	105	240	1	9.5	40	EEMAX ACCUMIX 2 AMO7240T	1,2
EWH-5	MOP SINK JAN/MECH (107)	ELECTRIC TANKLESS	2	82	120	240	1	18	75	EEMAX HOME ADVANTAGE - HA018240	1,2

REMARKS:
1. PROVIDE WITH ASSE 1070 APPROVED INTERGRATED MIXING VALVE CONFORM TO UPC 407.3
2. PROVIDE THERMOSTATIC MIXING VALVE AS MEANS TO TEMPERATURE LIMITING DEVICE

PLUMBING FIXTURE SCHEDULE

TAG	ITEM	MANUFACTURER & MODEL	WASTE	VENT	CW	HW	FITTINGS/ACCESSORIES OR DESIGN DATA	ITEM DESCRIPTION
HWC	WALL MOUNTED HANDICAP WATER CLOSET	KOHLER K-4325	3"	2"	1"	NA	SLOAN SOLIS DUAL FLUSH 8111-1.6/1.1 SOLAR POWER FLUSHOMETER, ZURN NARROW WALL CARRIER ZN1201-H (COORDINATE INLET AND FLOW DIRECTION)	VITREOUS CHINA, WATER SAVER, SIPHON JET ACTION, ELONGATED BOWL, MEETS ANSI A112.19.2M. MEETS ADA REQUIREMENTS, MOUNT AT ADA HEIGHT
WC	WALL MOUNTED WATER CLOSET	KOHLER K-4325	3"	2"	1"	NA	SLOAN SOLIS DUAL FLUSH 8111-1.6/1.1 SOLAR POWER FLUSHOMETER, ZURN NARROW WALL CARRIER ZN1201-H (COORDINATE INLET AND FLOW DIRECTION)	VITREOUS CHINA, WATER SAVER, SIPHON JET ACTION, ELONGATED BOWL, MEETS ANSI A112.19.2M. MEETS ADA REQUIREMENTS
HUR	URINAL	KOHLER K5016-ET-0	2"	2"	3/4"	NA	SLOAN SOLIS 8180	VITREOUS CHINA, WATER SAVER, SIPHON JET ACTION, ELONGATED BOWL, MEETS ANSI A112.19.2M. MEETS ADA REQUIREMENTS
LAV	WALL-HUNG LAVATORY	KOHLER K 2031-0	1-1/4"	1-1/4"	1/2"	1/2"	KOHLER K-13462-CP FAUCET	VITREOUS CHINA, REAR OVERFLOW WITH STRAINER
WCO	WALL CLEANOUT	JOSAM 58600 SERIES	SEE PLAN	NA	NA	NA	NA	CAST BRONZE COUNTERSUNK PLUG AND POLISHED STAINLESS STEEL ROUND ACCESS COVER PLATE SECURED TO PLUG BY COUNTERSUNK SCREW
DPCO	DECK PLATE CLEANOUT	WATTS CO-1200-RX	SEE PLAN	NA	NA	NA	EPOXY COATED CAST IRON FLOOR CLEANOUT WITH 5" ROUND ADJUSTABLE GASKETED EXTRA HEAVY DUTY STAINLESS STEEL TOP	FLOOR CLEANOUT, FLUSH, NO HUB OUTLET.
WH-1	WALL HYDRANT	ZURN Z1350	NA	NA	3/4"	NA	NA	ENCASED, MODERATE CLIMATE, VACUUM BREAKER, RECESSED BOX, LOCKING COVER AND KEY
WH-2	WALL HYDRANT	ZURN Z1321	NA	NA	3/4"	NA	NA	NON-FREEZE, INTEGRAL VACUUM BREAKER, RECESSED BOX, LOCKING COVER AND KEY
DF	OUTDOOR DRINKING FOUNTAIN	ELKAY MODEL # LK4409BF	1-1/4"	1-1/4"	1/2"	NA	COORDINATE FINISH WITH ARCHITECT	MOUNTED DRINKING FOUNTAIN AND BOTTLE FILLER, CORROSION RESISTANT, PUSH BUTTON OPERATION. MEETS ADA REQUIREMENTS
TMV	MIXING VALVE	POWERS LFLM495	NA	NA	1/2" LAV, 3/4" MOP BASIN	1/2" LAV, 3/4" MOP BASIN	COLOR-CODED DIAL THERMOMETER	BRONZE BODY CONSTRUCTION; REPLACEABLE POLYMER CHECK SEATS; REMOVABLE STAINLESS STEEL RELIEF VALVE SEAT; QUARTER TURN BALL VALVES; BYPASS HIGH AND LOW DEMAND
MB	MOP BASIN	FIAT TSBCR1000	3"	2"	1/2"	1/2"	FIAT 830-AA WALL MOUNT SERVICE-SINK FAUCET, FIAT 1239-BB ALUMINUM BUMP GUARD, FIAT 833-AA SILICONE SEALANT	PRE-CAST TERRAZZO, 12" HIGH, CORNER TYPE, 6" DROP FRONT, STAINLESS STEEL DRAIN BODY, COMBINATION STAINLESS STEEL DOME STRAINER, STAINLESS STEEL CAPS ON ALL CURB, PROVIDE DEEP SEAL P-TRAP. INSTALL ON 1/2" MORTAR WITH 1/2" CLEARANCE BETWEEN MOP BASIN AND WALL, PROVIDE HOSE AND HOSE BRACKET, WALL GUARDS, 28"X28"
FD	FLOOR DRAIN	JOSAM 30000 SERIES	SEE PLAN	NA	NA	NA	NA	TWO-PIECE BODY WITH ADJUSTABLE STRAINER, WITH WEEPHOLES AND INVERTIBLE COLLAR, TRAP SEAL
SA	SHOCK ABSORBER	ZURN Z1700	SEE PLAN	NA	1/2"	NA	STAINLESS STEEL	WATER HAMMER ARESTOR
RD	ROOF DRAIN	ZURN Z163	SEE PLAN	NA	NA	NA		OVERFLOW AND PRIMARY COMBINATION
DS	DOWNSPOUT	ZURN Z199	SEE PLAN	NA	NA	NA		BRONZE BODY

PLUMBING ABBREVIATIONS

AFF	ABOVE FINISH FLOOR
BOP	BOTTOM OF PIPE
CD	CONDENSATE DRAIN
CLG	CEILING
DN	DOWN
EC	ELECTRICAL CONTRACTOR
ELEV	ELEVATION
ESP	EXTERNAL STATIC PRESSURE
EWC	ELECTRIC WATER COOLER
EWT	ENTERING WATER TEMPERATURE
FAI	FRESH AIR INTAKE
FF	FINISH FLOOR
FLA	FULL LOAD AMPS
FLR	FLOOR
FT HD	FEET OF HEAD
GA	GAUGE OR GAGE
GAL	GALLON
GPH	GALLONS PER HOUR
GPM	GALLONS PER MINUTE
HP	HORSEPOWER
IN	INCH
IN WG	INCHES WATER GAUGE
INV	INVERT
LAV	LAVATORY
LF	LINEAR FEET/FOOT
LWT	LEAVING WATER TEMPERATURE
MAX	MAXIMUM
MBH	BTU PER HOUR (THOUSAND)
MH	MANHOLE
MCA	MINIMUM CIRCUIT AMPS
MIN	MINIMUM
MOCP	MAXIMUM OVERCURRENT PROTECTION
MTG HGT	MOUNTING HEIGHT
MV	MANUAL AIR VENT
N/A	NOT APPLICABLE
N C	NORMALLY CLOSED
NIC	NOT IN CONTRACT
N O	NORMALLY OPEN
PC	PLUMBING CONTRACTOR
PD	PRESSURE DROP
PH	PHASE
PSIG	POUNDS PER SQUARE INCH GAUGE
RPM	REVOLUTIONS PER MINUTE
SP	STATIC PRESSURE
TD OR ΔT	TEMPERATURE DIFFERENCE
TEMP	TEMPERATURE
UNO	UNLESS NOTED OTHERWISE
UR	URINAL
VOLT	VOLTAGE
VTR	VENT THROUGH ROOF
W	WATT
WBT	WET BULB TEMPERATURE
WC	WATER CLOSET
WG	WATER GAGE
WPD	WATER PRESSURE DROP
ºF	DEGREES FAHRENHEIT
&	AND
#	NUMBER

PLUMBING PIPING SYMBOLS (ONE-LINE)

- BALL VALVE
- WYE STRAINER
- REDUCED PRESSURE ZONE (BALL VALVES)
- PIPE TURNING UP
- PIPE TURNING DOWN
- PIPE BRANCH UP
- PIPE BRANCH DN
- CONCENTRIC REDUCER
- ECCENTRIC REDUCER
- PIPE CAP
- PIPE BREAK
- UNION
- MANUAL AIR VENT
- DECK PLATE CLEANOUT
- WALL CLEANOUT / CLEANOUT
- FLOOR DRAIN / ROOF DRAIN
- HOSE BIBB / NON-FREEZE HOSE BIBB
- FRESH AIR INLET
- WATER HAMMER ARRESTER
- SINGLE BLIND FLANGE
- DOUBLE BLIND FLANGE

PLUMBING LINE-TYPES (ONE-LINE)

2" CW	COLD WATER PIPING (SIZE AS INDICATED)
2" HW	HOT WATER PIPING (SIZE AS INDICATED)
2" HWR	HOT WATER RETURN PIPING (SIZE AS INDICATED)
2" SAN	SANITARY PIPING (SIZE AS INDICATED)
2" ST	STORM PIPING (SIZE AS INDICATED)
2" EMST	EMERGENCY STORM PIPING (SIZE AS INDICATED)
2" USAN	UNDERSLAB SANITARY PIPING (SIZE AS INDICATED)
2" UST	UNDERSLAB STORM PIPING (SIZE AS INDICATED)
2" UV	UNDERSLAB VENT PIPING (SIZE AS INDICATED)
2" V	VENT PIPING (SIZE AS INDICATED)

Drawing Copyright © 2023

CHA
200 Corporate Place, Suite 110
Rocky Hill, CT 06067-1861
860.257.4557 . www.chacompanies.com

DeGennaro Engineering
40 Oregan Trail, Waterford, NY 12188
T: 518-633-1400

University of Hartford

UNIVERSITY OF HARTFORD

200 BLOOMFIELD AVE
WEST HARTFORD, CT 06117

PLAN NORTH

TRUE NORTH

NOT FOR CONSTRUCTION

IT IS A VIOLATION OF LAW FOR ANY PERSON, UNLESS THEY ARE ACTING UNDER THE DIRECTION OF A LICENSED PROFESSIONAL ENGINEER, ARCHITECT, LANDSCAPE ARCHITECT OR LAND SURVEYOR TO ALTER AN ITEM IN ANY WAY. IF AN ITEM BEARING THE STAMP OF A LICENSED PROFESSIONAL IS ALTERED, THE ALTERING ENGINEER, ARCHITECT, LANDSCAPE ARCHITECT OR LAND SURVEYOR SHALL STAMP THE DOCUMENT AND INCLUDE THE NOTATION "ALTERED BY" FOLLOWED BY THEIR SIGNATURE, THE DATE OF SUCH ALTERATION, AND A SPECIFIC DESCRIPTION OF THE ALTERATION.

UNIVERSITY OF HARTFORD ATHLETIC SPORTS COMPLEX

No.	Submittal / Revision	App'd.	By	Date

LEGEND, ABBREVIATIONS, SYMBOLS, AND SCHEDULES

Designed By:	Drawn By:	Checked By:
ATS	KMH	JAL
Issue Date: 01/13/2023	Project No: 059815	Scale: AS SHOWN

Drawing No:

P-001

Central File: Update this text with Central file location
Saved: 1/13/2023 10:27:24 AM Current Local File: C:\Users\5737\Documents\059815 - Mech - R22_asmith3WK4W.rvt

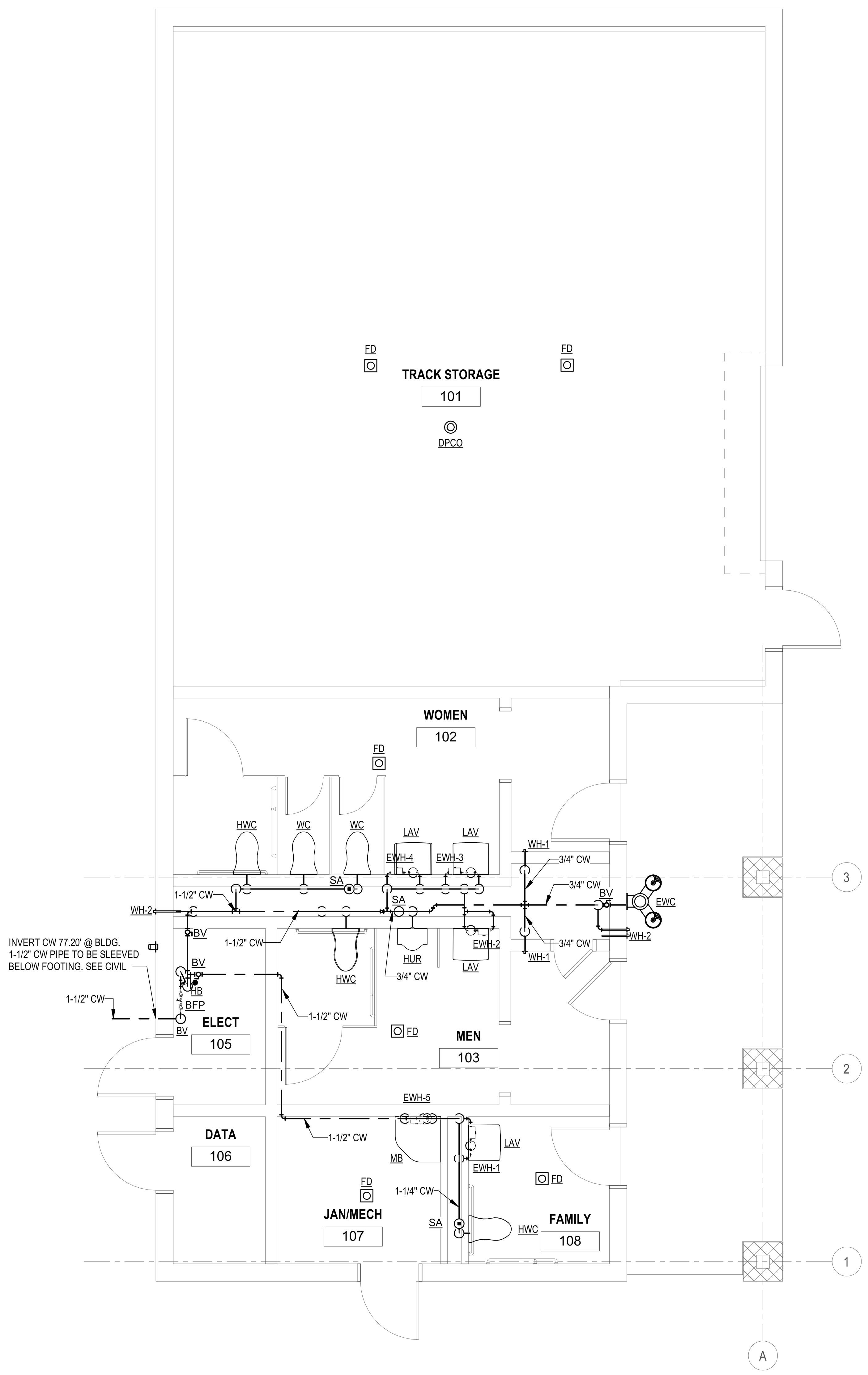

1 PLUMBING FIRST FLOOR POTABLE PIPING PLAN

1/4" = 1'-0"

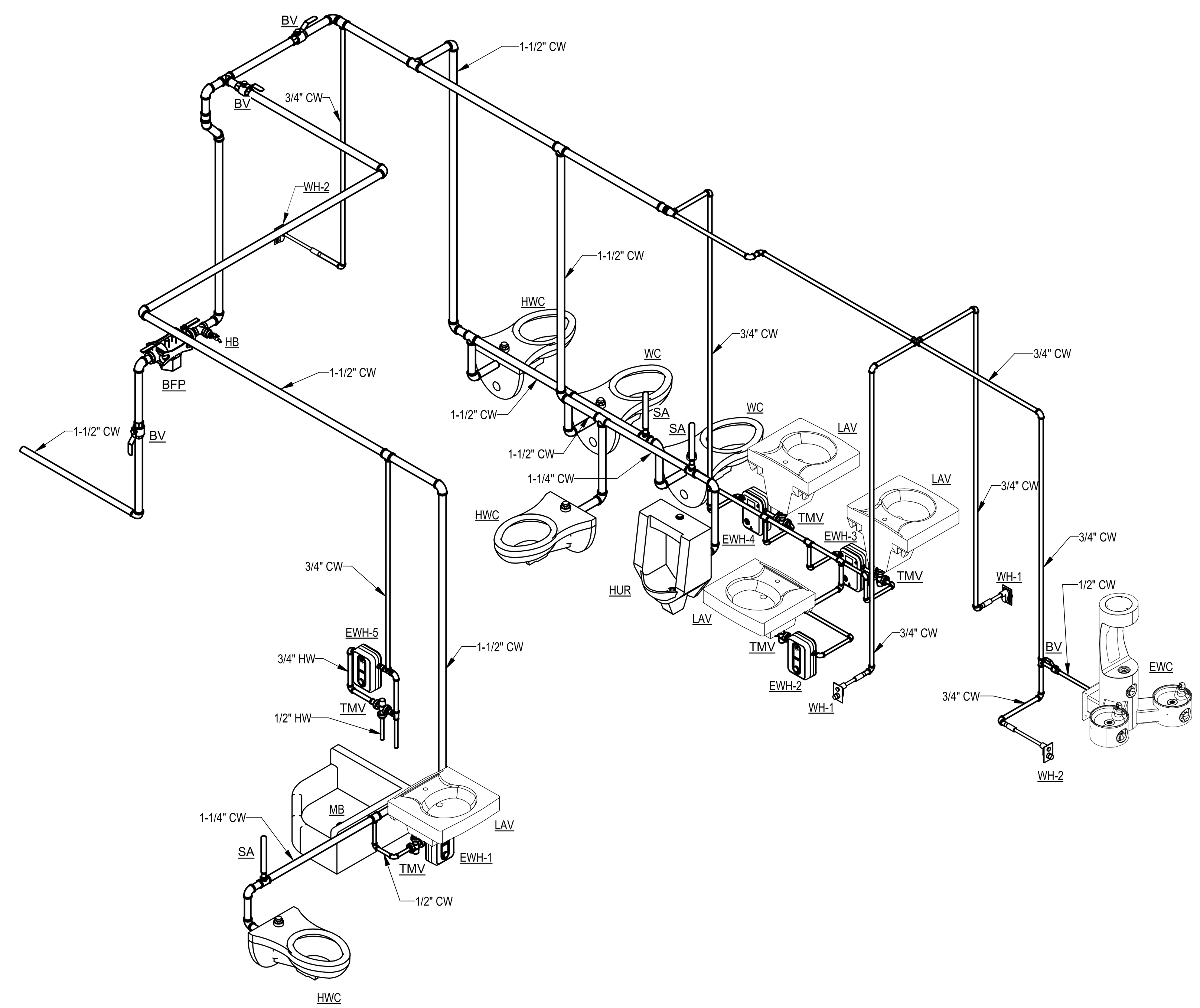

2 POTABLE ISOMETRIC

NOT TO SCALE

Central File: Update this text with Central file location
Saved: 1/13/2023 10:27:27 AM Current Local File: C:\Users\5737\Documents\059815 - Mech - R22_asmith3WK4W.rvt

Drawing Copyright © 2023

CHA
200 Corporate Place, Suite 110
Rocky Hill, CT 06067-1861
860.257.4557 · www.chacompanies.com

DeGennaro Engineering
40 Oregan Trail, Waterford, NY 12188
T: 518-633-1400

University of Hartford

UNIVERSITY OF HARTFORD

200 BLOOMFIELD AVE
WEST HARTFORD, CT 06117

PLAN NORTH

TRUE NORTH

NOT FOR CONSTRUCTION

IT IS A VIOLATION OF LAW FOR ANY PERSON, UNLESS THEY ARE ACTING UNDER THE DIRECTION OF A LICENSED PROFESSIONAL ENGINEER, ARCHITECT, LANDSCAPE ARCHITECT OR LAND SURVEYOR TO ALTER AN ITEM IN ANY WAY. IF AN ITEM BEARING THE STAMP OF A LICENSED PROFESSIONAL IS ALTERED, THE ALTERING ENGINEER, ARCHITECT, LANDSCAPE ARCHITECT OR LAND SURVEYOR SHALL STAMP THE DOCUMENT AND INCLUDE THE NOTATION "ALTERED BY" FOLLOWED BY THEIR SIGNATURE, THE DATE OF SUCH ALTERATION, AND A SPECIFIC DESCRIPTION OF THE ALTERATION.

UNIVERSITY OF HARTFORD ATHLETIC SPORTS COMPLEX

No.	Submittal / Revision	App'd	By	Date

POTABLE PLUMBING PLAN

Designed By:	Drawn By:	Checked By:
ATS	KMH	JAL
Issue Date: 01/13/2023	Project No: 059815	Scale: AS SHOWN

Drawing No:

P-101

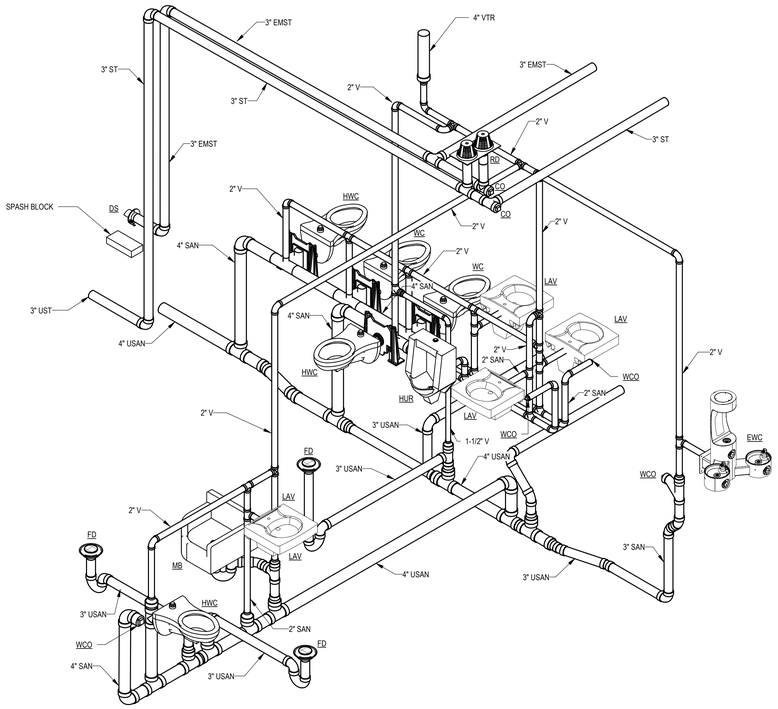

1 SANITARY AND VENT ISOMETRIC
NOT TO SCALE

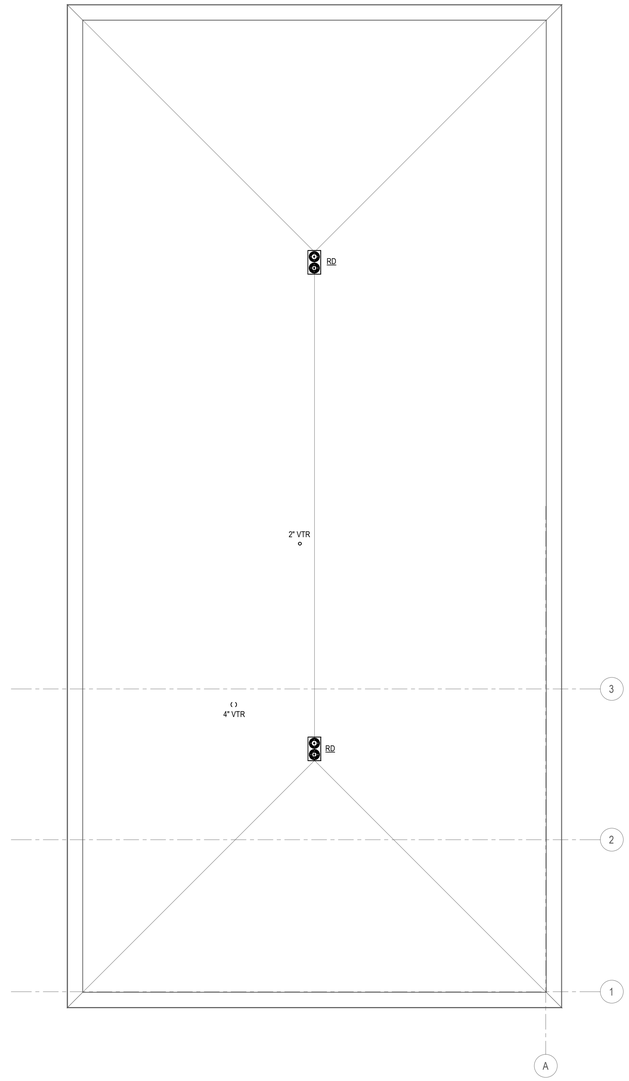

2 PLUMBING ROOF DRAINAGE AND VENT PIPING PLAN
1/4" = 1'-0"

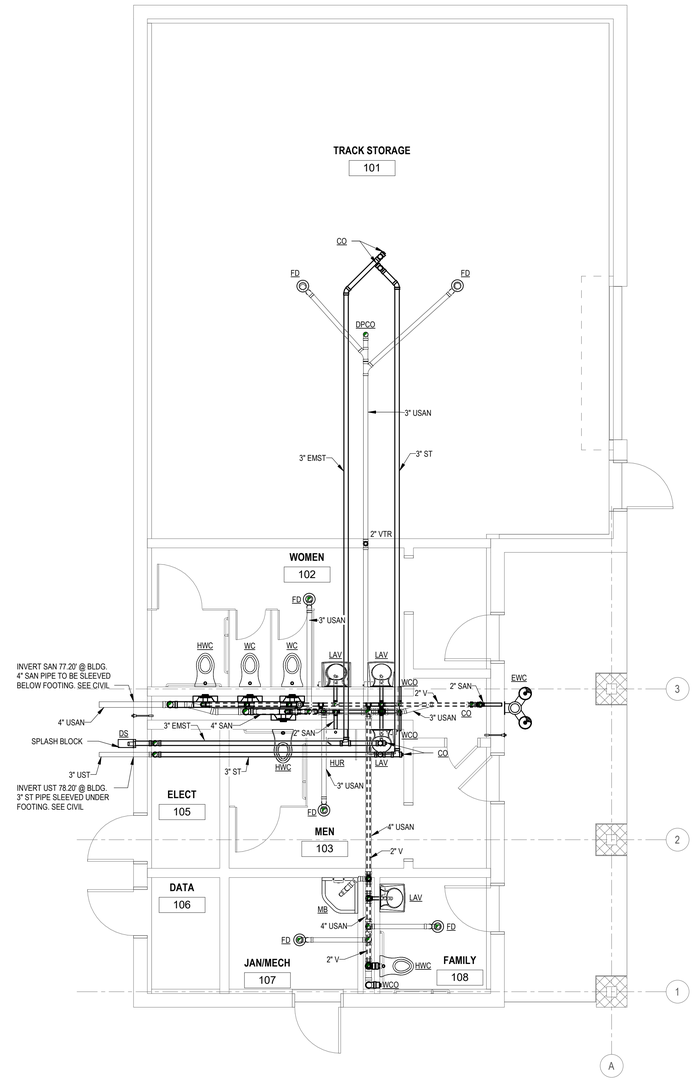

3 PLUMBING FIRST FLOOR DRAINAGE AND VENT PIPING PLAN
1/4" = 1'-0"

Drawing Copyright © 2023

CHA
200 Corporate Place, Suite 110
Rocky Hill, CT 06067-1861
860.257.4557 www.chacompanies.com

DeGennaro Engineering
40 Oregan Trail, Waterford, NY 12188
T: 518-633-1400

University of Hartford

UNIVERSITY OF HARTFORD

200 BLOOMFIELD AVE
WEST HARTFORD, CT 06117

PLAN NORTH

TRUE NORTH

NOT FOR CONSTRUCTION

IT IS A VIOLATION OF LAW FOR ANY PERSON, UNLESS THEY ARE ACTING UNDER THE DIRECTION OF A LICENSED PROFESSIONAL ENGINEER, ARCHITECT, LANDSCAPE ARCHITECT OR LAND SURVEYOR TO ALTER AN ITEM IN ANY WAY. IF AN ITEM BEARING THE STAMP OF A LICENSED PROFESSIONAL IS ALTERED THE ALTERING ENGINEER, ARCHITECT, LANDSCAPE ARCHITECT OR LAND SURVEYOR SHALL STAMP THE DOCUMENT AND INCLUDE THE NOTATION "ALTERED BY" FOLLOWED BY THEIR SIGNATURE, THE DATE OF SUCH ALTERATION, AND A SPECIFIC DESCRIPTION OF THE ALTERATION.

UNIVERSITY OF HARTFORD ATHLETIC SPORTS COMPLEX

No.	Submittal / Revision	App'd.	By	Date

SANITARY, VENT AND STORM DRAIN PLUMBING PLAN

Designed By:	Drawn By:	Checked By:
ATS	KMH	JAL
Issue Date:	Project No:	Scale:
01/13/2023	059815	AS SHOWN

Drawing No:

P-102

Central File: Update this text with Central file location
Saved: 1/13/2023 10:27:30 AM Current Local File: C:\Users\5737\Documents\059815 - Mech - R22_asmith9WK4W.rvt

ABBREVIATIONS

A	AMPERE
AC	ALTERNATING CURRENT
AF	AMPERE FRAME
AFF/G	ABOVE FINISHED FLOOR/GRADE
AIC	AMPERE INTERRUPTING CAPACITY
AT	AMPERE TRIP
AUX	AUXILIARY
A/V	AUDIBLE/VISUAL
AWG	AMERICAN WIRE GAUGE
BB	BACKBOARD
BCW	BARE COPPER WIRE
BATT	BATTERY
BTM	BOTTOM
BKR	BREAKER
BLDG	BUILDING
C	CONDUIT
CAB	CABINET
CATV	COMMUNITY ACCESS TELEVISION (CABLE TELEVISION)
CB	CIRCUIT BREAKER
CIR	CIRCUIT
CKT	CIRCUIT
℄	CENTER LINE
CO	COMPANY
COMM	COMMUNICATIONS
CONN	CONNECTION, CONNECT
CUH	CABINET UNIT HEATER
CT	CURRENT TRANSFORMER
CU	COPPER
CWA	CONSTANT WATTAGE AUTOTRANSFORMER
△	DELTA CONNECTION
D	DEEP
DB	DECIBEL
DET	DETECTOR
DIA	DIAMETER
DISC	DISCONNECT
DIST	DISTRIBUTION
DIV	DIVISION
DN	DOWN
DWG	DRAWING
EA	EACH
EBH	ELECTRIC BASEBOARD HEATER
EF	EXHAUST FAN
EL	ELEVATION
ELEC	ELECTRIC(AL)
EMER	EMERGENCY
ENCL	ENCLOSURE
EQUIP	EQUIPMENT
EWC	ELECTRIC WATER COOLER
EXT	EXTERIOR
F	FUSE(D)
FA	FIRE ALARM
FACP	FIRE ALARM CONTROL PANEL
FC	FOOTCANDLES
FIXT	FIXTURE
FLR	FLOOR
FLUOR	FLUORESCENT
FT	FOOT (FEET)
FUT	FUTURE
G, GND	GROUND
GALV	GALVANIZE(D)
GC	GENERAL CONTRACTOR
GFI	GROUND FAULT CIRCUIT INTERRUPTER
GFP	GROUND FAULT PROTECTION
HD	HEAVY DUTY
HGT	HEIGHT
HID	HIGH INTENSITY DISCHARGE
HO	HIGH OUTPUT
HOA	HAND-OFF-AUTOMATIC
HP	HORSEPOWER
HPF	HIGH POWER FACTOR
HPS	HIGH PRESSURE SODIUM
HTR	HEATER
HV	HIGH VOLTAGE
HW	HOT WATER
ID	IDENTIFY, IDENTIFICATION
INCAND	INCANDESCENT
J-BOX	JUNCTION BOX
J.C.	JANITOR CLOSET
JCT	JUNCTION
KCM/Kcmil	THOUSAND CIRCULAR MILS
KVA	KILO VOLT AMPERE
KW	KILOWATT
LGT	LIGHTING
LT(S)	LIGHT(S)
LED	LIGHT EMITTING DIODE
L	LOUVER
MAX	MAXIMUM
MCB	MAIN CIRCUIT BREAKER
MC	METAL CLAD CABLE
MFR	MANUFACTURER
MH	METAL HALIDE
MECH	MECHANICAL
MIN	MINIMUM
ML	MOTORIZED LOUVER
MLO	MAIN LUGS ONLY
MT	MOUNT
MTD	MOUNTED
MTR	MOTOR
N	NORTH
NEC	NATIONAL ELECTRICAL CODE
NF	NON-FUSED
NL	NIGHT LIGHT
No/#	NUMBER
OC	OVER COUNTER
OL	OVERLOAD
P	POLE(S)
PA	PUBLIC ADDRESS
PNL	PANEL
PR	PAIR
PRI	PRIMARY
PWR	POWER
ø	PHASE
PT	PRESSURE TREATED
RECEPT	RECEPTACLE
RGS	RIGID GALVANIZED STEEL
RM	ROOM
SEC	SECONDARY
SH	SHIELDED
SPKR	SPEAKER
SW	SWITCH
TEMP	TEMPORARY/TEMPERATURE
T-STAT	THERMOSTAT
TB	TERMINAL BOARD
TYP	TYPICAL
UH	UNIT HEATER
UON	UNLESS OTHERWISE NOTED
V	VOLT, VOLTS
VA	VOLT-AMPERES
W	WATT, WIRE
W/	WITH
WP	WEATHERPROOF
XFMR/T	TRANSFORMER
Y	WYE CONNECTION

RACEWAYS

- CONDUIT CONCEALED OR EXPOSED AS SPECIFIED
- CONDUIT TURNING UP
- CONDUIT TURNING DOWN
- PP-1 1/3/5 — HOMERUN BACK TO PANEL (PANEL AND CIRCUITS INDICATED)
- CIRCUIT CONTINUED OR CONNECTED TO EQUIPMENT AS INDICATED
- UNDERGROUND CONDUIT
- GROUND CONDUCTOR
- GROUNDING CONDUCTOR TERMINATION POINT AT SERVICE EQUIPMENT
- INDICATES EXISTING DEVICES OR EQUIPMENT

LIGHTING

REFER TO LIGHTING FIXTURE SCHEDULE FOR TYPE, LAMP, BALLAST, POWER REQUIREMENTS, MOUNTING HEIGHT AND MANUFACTURER.

- SPORTS LIGHTNG POLE
- SUSPENDED LIGHTING FIXTURE
- RECESSED DOWNLIGHT LIGHTING FIXTURE

DEVICES AND APPURTENANCES

- HH X — HANDHOLE. SUBSCRIPT DENOTES TYPE: P=POWER; D=DATA
- XX YY — POWER/COMMUNICATIONS BOX IN WEATHERPROOF ENCLOSURE. LABEL (SHOWN AS XX IN EXAMPLE) DENOTES TYPE AS FOLLOWS: P=POWER, C=COMMUNICATIONS, CP=COMMUNICATIONS AND POWER. SUBSCRIPT (SHOWN AS YY IN EXAMPLE) REFERS TO THE DETAIL THAT CORRESPONDS TO EACH BOX.
- MECHANICAL EQUIPMENT CONNECTION, REFER TO MECHANICAL DRAWINGS FOR ADDITIONAL INFORMATION.
- M — MOTOR, REFER TO MECHANICAL DRAWINGS FOR ADDITIONAL INFORMATION.

GENERAL

- # — NUMBER IN CIRCLE, WITH OR WITHOUT ARROW OR LEADER, REFER TO MATCHING NUMBERED CODED NOTE
- # — NUMBER IN DIAMOND, WITH OR WITHOUT ARROW OR LEADER; REFER TO THE DEMOLITION CODED NOTE WITH THE MATCHING NUMBER
- X / XXX — DETAIL CALLOUT
- XXX — CABLE TAG, REFER TO CABLE SCHEDULE ON DWG. E-501 FOR FURTHER INFORMATION.

GENERAL NOTES

1. REFER TO CIVIL DRAWINGS FOR SYMBOLS ASSOCIATED WITH WORK, EQUIPMENT, ETC. BY OTHER(S).
2. ALL WORK SHOWN ON THE ELECTRICAL DRAWINGS SHALL BE BY THE ELECTRICAL CONTRACT UNLESS OTHERWISE INDICATED.
3. CONDUIT RUNS SHOWN ARE DIAGRAMMATIC UON. EXACT LOCATION OF ALL CONDUIT RUNS SHALL BE DETERMINED IN THE FIELD. COORDINATE INSTALLATIONS AND AVOID CONFLICT WITH PIPING, DUCTWORK, ACCESS DOORS AND WORK BY OTHER TRADES.
4. GENERAL NOTES APPLY TO ALL ELECTRICAL CONTRACT DRAWINGS.

ONE LINE DIAGRAMS

- POWER TRANSFORMER
- AMPS FRAME — 400AF; AMPS TRIP — 400AT; NR. of POLES — 3P; GFP — MOLDED CASE CIRCUIT BREAKER W/GROUND FAULT PROTECTION
- SAFETY DISCONNECT SWITCH – UNFUSED
- CONNECTED CONDUCTORS
- CROSSING OF CONDUCTORS NOT CONNECTED
- CURRENT TRANSFORMER
- FUSE
- GROUNDING CONNECTION
- FUSED DISCONNECT SWITCH AND/OR BOLT PRESSURE SWITCH
- METER — METER ASSEMBLY
- INDICATES EQUIPMENT ENCLOSURE

POWER DISTRIBUTION EQUIPMENT

- SURFACE MOUNTED BRANCH CIRCUIT PANELBOARD 208/120V, 3ø, 4W, U.O.N.
- SURFACE MOUNTED BRANCH CIRCUIT PANELBOARD 480/277V, 3ø, 4W, U.O.N.
- LIGHTING CONTACTOR
- METER AND CT CABINET

Drawing Copyright © 2020

CHA
390 Corporate Place, Suite 110
Rocky Hill, CT 06067-1861
860.257.8557 : www.chacompanies.com

University of Hartford

IT IS A VIOLATION OF LAW FOR ANY PERSON, UNLESS THEY ARE ACTING UNDER THE DIRECTION OF A LICENSED PROFESSIONAL ENGINEER, ARCHITECT, LANDSCAPE ARCHITECT OR LAND SURVEYOR TO ALTER AN ITEM IN ANY WAY. IF AN ITEM BEARING THE STAMP OF A LICENSED PROFESSIONAL ENGINEER, ARCHITECT, LANDSCAPE ARCHITECT OR LAND SURVEYOR SHALL STAMP THE DOCUMENT AND INCLUDE THE NOTATION "ALTERED BY" FOLLOWED BY THEIR SIGNATURE, THE DATE OF SUCH ALTERATION, AND A SPECIFIC DESCRIPTION OF THE ALTERATION.

UNIVERSITY OF HARTFORD
ATHLETIC SPORTS COMPLEX
200 BLOOMFIELD AVE, WEST
HARTFORD, CT 06117

No.	Submittal / Revision	App'd	By	Date

ELECTRICAL LEGEND, ABBREVIATIONS AND SYMBOL LIST

Designed By:	Drawn By:	Checked By:
RWW	RWW	JJD
Issue Date:	Project No:	Scale:
1/13/2023	59815	AS SHOWN

Drawing No.:
E-001

File: V:\PROJECTS\ANY\V6\059815.000\99_DESIGN\DRAWINGS\01_SHEETS\E-001-059815.DWG
Saved: 1/13/2023 9:38:49 AM Printed: 1/13/2023 3:22:07 PM Current User: Wright, Ryan LastSaved By: 8456

GENERAL NOTES

1. REFER TO CABLE SCHEDULE ON DWG. E-501 FOR FURTHER INFORMATION.

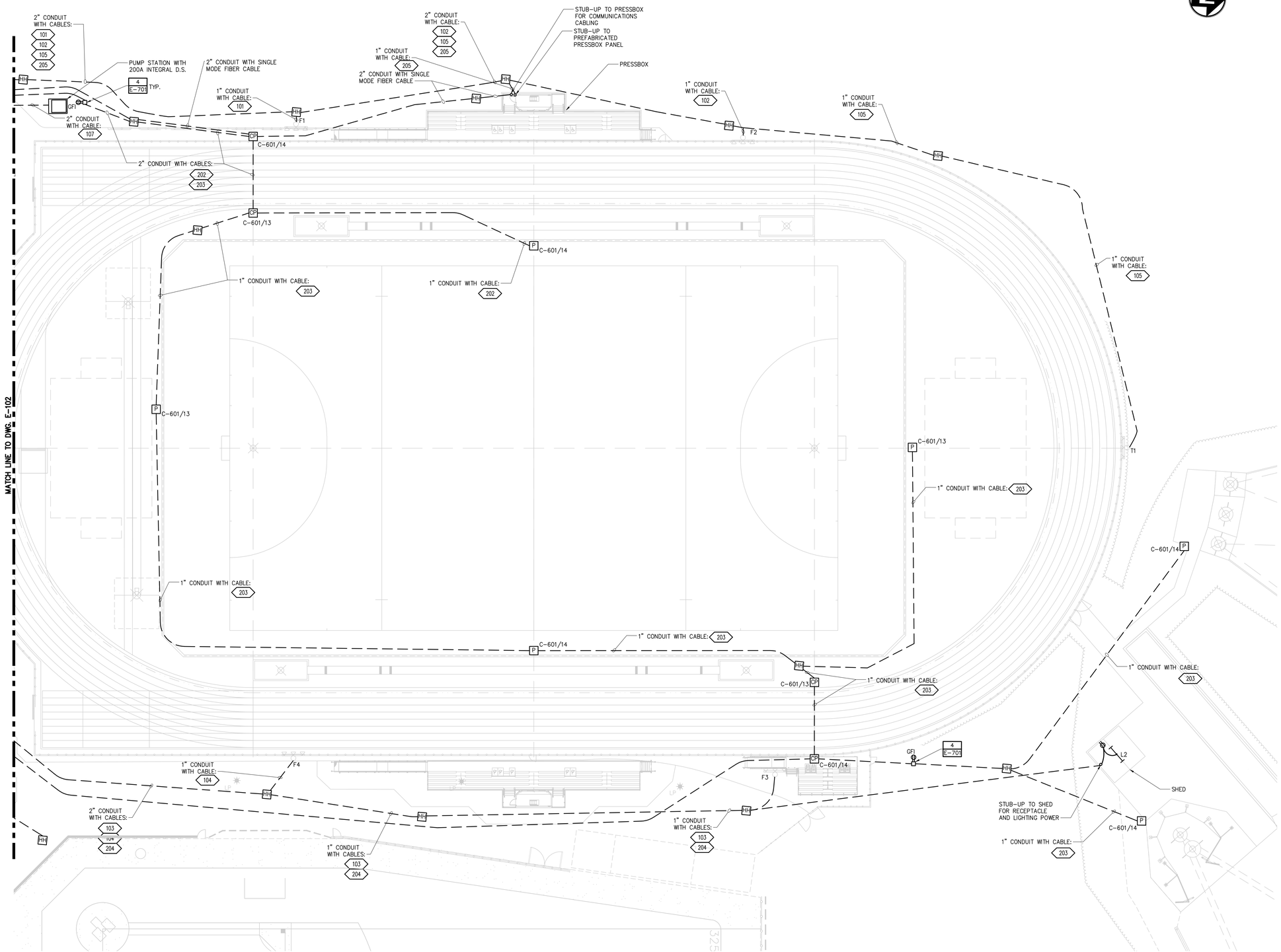

1 ELECTRICAL SITE PLAN 1 OF 2
– 1" = 20' – 0"

GRAPHIC SCALE (FEET)
1"=20' 0' 20' 40' 60' 80' 100'

Drawing Copyright © 2023

CHA
390 Corporate Place, Suite 110
Rocky Hill, CT 06067-1861
860.257.8537 www.chacompanies.com

University of Hartford

IT IS A VIOLATION OF LAW FOR ANY PERSON, UNLESS THEY ARE ACTING UNDER THE DIRECTION OF A LICENSED PROFESSIONAL ENGINEER, ARCHITECT, LANDSCAPE ARCHITECT OR LAND SURVEYOR, TO ALTER AN ITEM IN ANY WAY. IF AN ITEM BEARING THE STAMP OF A LICENSED PROFESSIONAL IS ALTERED, THE ALTERING ENGINEER, ARCHITECT, LANDSCAPE ARCHITECT OR LAND SURVEYOR SHALL STAMP THE DOCUMENT AND INCLUDE THE NOTATION "ALTERED BY" FOLLOWED BY THEIR SIGNATURE, THE DATE OF SUCH ALTERATION, AND A SPECIFIC DESCRIPTION OF THE ALTERATION.

UNIVERSITY OF HARTFORD
ATHLETIC SPORTS COMPLEX
200 BLOOMFIELD AVE, WEST
HARTFORD, CT 06117

No.	Submittal / Revision	App'd	By	Date

ELECTRICAL SITE PLAN 1 OF 2

Designed By:	Drawn By:	Checked By:
RWW	RWW	JJD
Issue Date:	Project No:	Scale:
1/13/2023	59815	AS SHOWN

Drawing No.:
E-101

File: V:\PROJECTS\ANYK6\059815.000\09_DESIGN\DRAWINGS\01_SHEETS\E-101-059815.DWG
Saved: 1/13/2023 3:22:19 PM Plotted: 1/13/2023 3:22:10 PM Current User: Wright, Ryan LastSaveBy: 8456

GENERAL NOTES

1. REFER TO CABLE SCHEDULE ON DWG. E-501 FOR FURTHER INFORMATION.

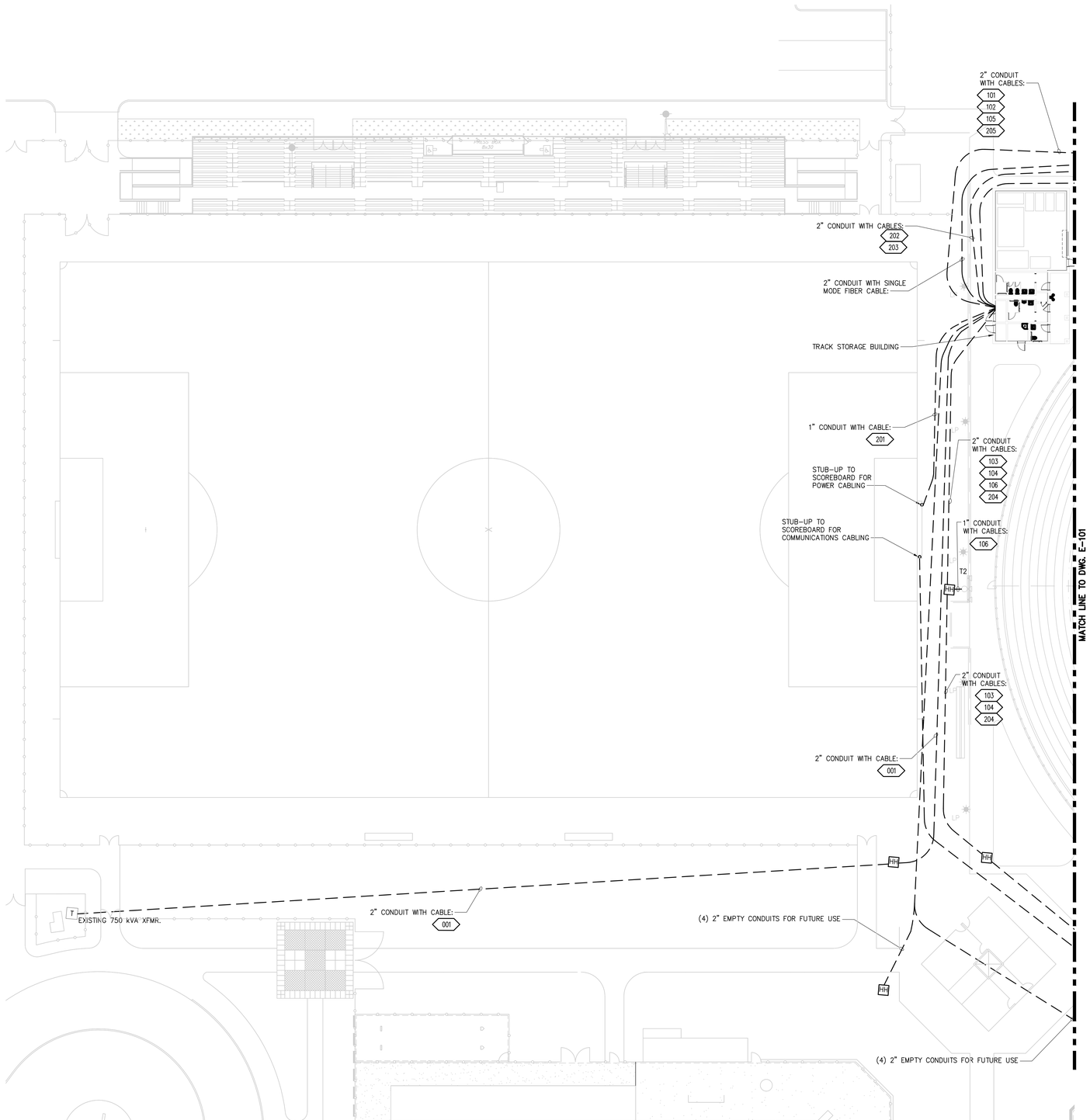

1 ELECTRICAL SITE PLAN 2 OF 2
– 1" = 20' – 0"

GRAPHIC SCALE (FEET)
1"=20' 0' 20' 40' 60' 80' 100'

Drawing Copyright © 2023

CHA
390 Corporate Place, Suite 110
Rocky Hill, CT 06067-1861
860.257.8537 www.chacompanies.com

University of Hartford

IT IS A VIOLATION OF LAW FOR ANY PERSON, UNLESS THEY ARE ACTING UNDER THE DIRECTION OF A LICENSED PROFESSIONAL ENGINEER, ARCHITECT, LANDSCAPE ARCHITECT OR LAND SURVEYOR TO ALTER AN ITEM IN ANY WAY. IF AN ITEM BEARING THE STAMP OF A LICENSED PROFESSIONAL ENGINEER, ARCHITECT, LANDSCAPE ARCHITECT OR LAND SURVEYOR SHALL STAMP THE DOCUMENT AND INCLUDE THE NOTATION "ALTERED BY" FOLLOWED BY THEIR SIGNATURE, THE DATE OF SUCH ALTERATION, AND A SPECIFIC DESCRIPTION OF THE ALTERATION.

UNIVERSITY OF HARTFORD
ATHLETIC SPORTS COMPLEX
200 BLOOMFIELD AVE, WEST
HARTFORD, CT 06117

No.	Submittal / Revision	App'd	By	Date

ELECTRICAL SITE PLAN 2 OF 2

Designed By:	Drawn By:	Checked By:
RWW	RWW	JJD
Issue Date:	Project No:	Scale:
1/13/2023	59815	AS SHOWN

Drawing No.:
E-102

File: V:\PROJECTS\ANY\V6\059815.000\09_DESIGN\DRAWINGS\01_SHEETS\E-101-059815.DWG
Saved: 1/13/2023 3:21:19 PM Plotted: 1/13/2023 3:22:16 PM Current User: Wright, Ryan LastSavedBy: 6456

GENERAL NOTES

1. REFER TO THE ELECTRICAL ONE-LINE DIAGRAM ON DWG. E-501 FOR ADDITIONAL INFORMATION.

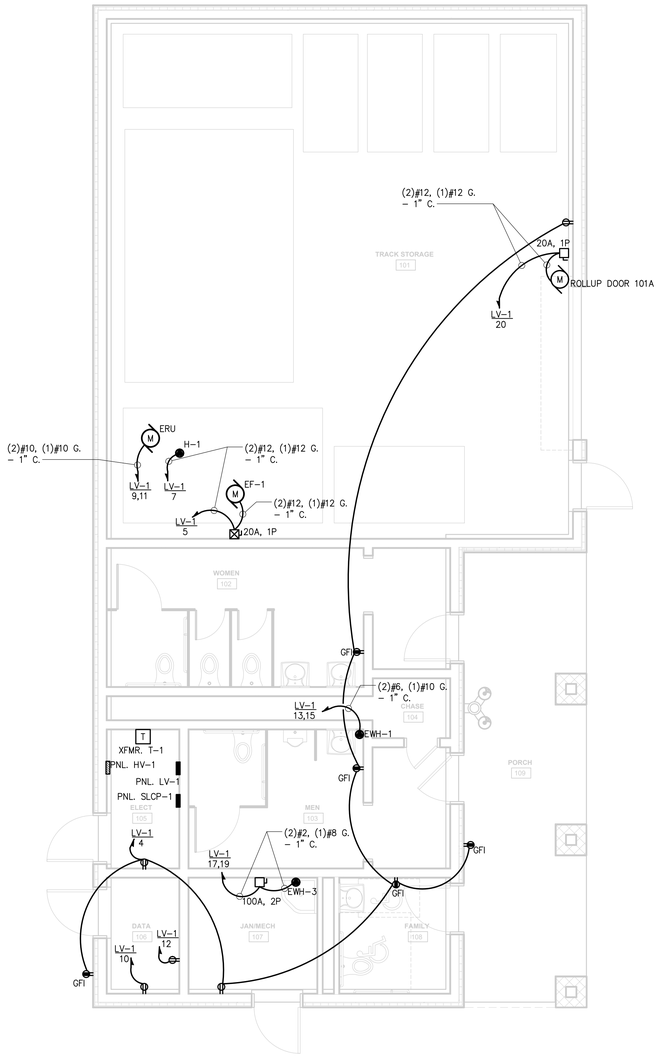

1 ELECTRICAL STORAGE BUILDING POWER PLAN
– 1/4" = 1'–0"

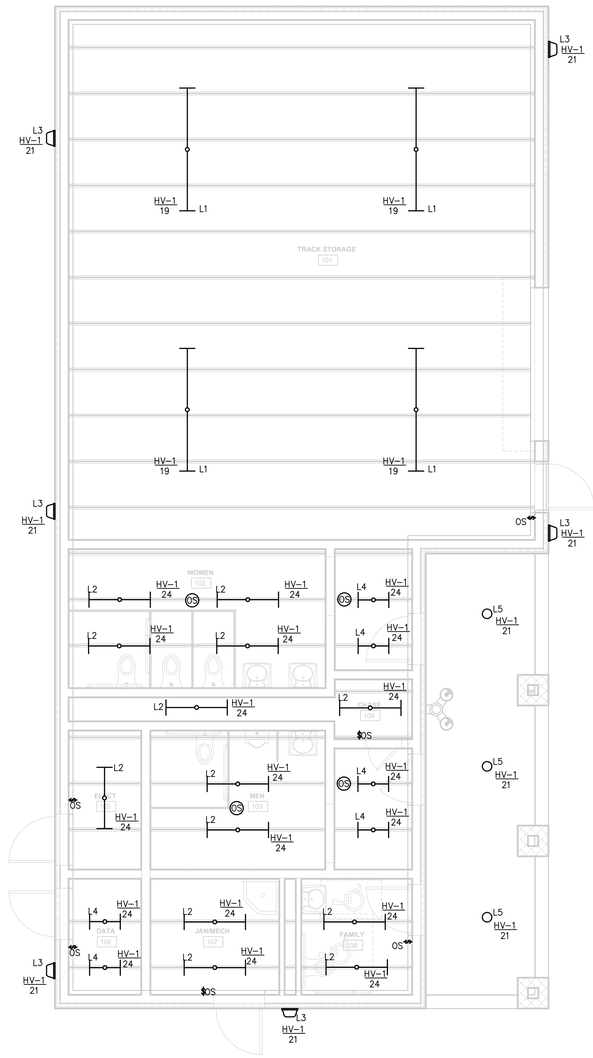

2 ELECTRICAL STORAGE BUILDING LIGHTING PLAN
– 1/4" = 1'–0"

GRAPHIC SCALE (FEET)
1/4"=1' 0' 4' 8' 12' 16' 20'

Drawing Copyright © 2023

CHA
390 Corporate Place, Suite 110
Rocky Hill, CT 06067-1861
860.257.8537 www.chacompanies.com

University of Hartford

IT IS A VIOLATION OF LAW FOR ANY PERSON, UNLESS THEY ARE ACTING UNDER THE DIRECTION OF A LICENSED PROFESSIONAL ENGINEER, ARCHITECT, LANDSCAPE ARCHITECT OR LAND SURVEYOR TO ALTER AN ITEM IN ANY WAY. IF AN ITEM BEARING THE STAMP OF A LICENSED PROFESSIONAL ENGINEER, ARCHITECT, LANDSCAPE ARCHITECT OR LAND SURVEYOR SHALL STAMP THE DOCUMENT AND INCLUDE THE NOTATION "ALTERED BY" FOLLOWED BY THEIR SIGNATURE, THE DATE OF SUCH ALTERATION, AND A SPECIFIC DESCRIPTION OF THE ALTERATION.

UNIVERSITY OF HARTFORD
ATHLETIC SPORTS COMPLEX
200 BLOOMFIELD AVE, WEST
HARTFORD, CT 06117

No.	Submittal / Revision	App'd	By	Date

ELECTRICAL PLANS - TRACK STORAGE BUILDING

Designed By:	Drawn By:	Checked By:
RWW	RWW	JJD
Issue Date:	Project No:	Scale:
1/13/2023	59815	AS SHOWN

Drawing No.:
E-103

File: V:\PROJECTS\ANY\K6\059815.000\09_DESIGN\DRAWINGS\01_SHEETS\E-104-059815.DWG
Saved: 1/13/2023 3:23:26 PM Plotted: 1/13/2023 3:22:31 PM Current User: Wright, Ryan LastSavedBy: 8456

SPORTS LIGHTING POLE SCHEDULE

TAG	DISCRIPTION	FIXTURE MOUNTING HEIGHT	POLE HEIGHT	VOLTS	MANUFACTURER & CATALOG NUMBER	COMMENTS	SYMBOL
F1	LED SPORTS LIGHTING POLE	(10) 1500W AT 80'	80'	480V	MUSCO, LED SPORTS LIGHTING OR APPROVED EQUAL		
F2	LED SPORTS LIGHTING POLE	(9) 1500W AT 80'	80'	480V	MUSCO, LED SPORTS LIGHTING OR APPROVED EQUAL		
F3	LED SPORTS LIGHTING POLE	(9) 1500W AT 80'	80'	480V	MUSCO, LED SPORTS LIGHTING OR APPROVED EQUAL		
F4	LED SPORTS LIGHTING POLE	(10) 1500W AT 80'	80'	480V	MUSCO, LED SPORTS LIGHTING OR APPROVED EQUAL		
T1	LED SPORTS LIGHTING POLE	(1) 1200W AT 60' (1) 900W AT 60' (2) 1500W AT 60'	60'	480V	MUSCO, LED SPORTS LIGHTING OR APPROVED EQUAL		
T2	LED SPORTS LIGHTING POLE	(1) 1200W AT 60' (2) 1500W AT 60'	60'	480V	MUSCO, LED SPORTS LIGHTING OR APPROVED EQUAL		

CABLE SCHEDULE

CABLE NUMBER	SYSTEM VOLTAGE	CONDUCTORS FROM SOURCE TO LOAD	FROM	TO	REMARKS
001	480V	(3)#4/0, (1)#6G	EXISTING XFMR.	HV-1	
101	480V	(3)#10, (1)#10G	SLCP-1	SPORTS LIGHTING POLE 'F1'	
102	480V	(3)#8, (1)#8G	SLCP-1	SPORTS LIGHTING POLE 'F2'	
103	480V	(3)#6, (1)#6G	SLCP-1	SPORTS LIGHTING POLE 'F3'	
104	480V	(3)#8, (1)#8G	SLCP-1	SPORTS LIGHTING POLE 'F4'	
105	480V	(3)#10, (1)#10G	SLCP-1	SPORTS LIGHTING POLE 'T1'	
106	480V	(3)#10, (1)#10G	SLCP-1	SPORTS LIGHTING POLE 'T2'	
107	480V	(3)#3/0, (1)#6G	HV-1	PUMP STATION	
201	120V	(2)#10, (1)#10G	LV-1	SCOREBOARD SB-1	
202	120V	(2)#4, (1)#4G	LV-1	NORTH TRACK AND FIELD RECEPTACLES AND BOXES.	
203	120V	(2)#1, (1)#1G	LV-1	SOUTH TRACK AND FIELD RECEPTACLES AND BOXES.	
204	120V	(2)#8, (1)#8G	LV-1	SHED CONVENIENCE POWER AND LIGHTING	
205	208V	(3)#4, (1)#4G	LV-1	PRESSBOX POWER PANEL	

LIGHTING FIXTURE SCHEDULE

	DESCRIPTION	MOUNTING	LAMP(S)	VOLTS	MANUFACTURER & CATALOG NUMBER	COMMENTS
L1	8' SUSPENDED LED FIXTURE	SUSPENDED	LED, 56.0W	120/277V	LITHONIA: MODEL TZL1F-L96-6000LM-MDD-MVOLT-40K-80CRI OR APPROVED EQUAL	
L2	4' SUSPENDED LED FIXTURE	SUSPENDED	LED, 39.0W	120/277V	LITHONIA: MODEL ZL1F-L48-4500LM-MDD-MVOLT-40K-80CRI OR APPROVED EQUAL	
L3	OUTDOOR WALL MOUNTED WEATHERPROOF WALL PACK	WALL	LED, 9.2W	120/277V	LITHONIA MODEL WPX0-ALO3-4000K-MVOLT-PE-DDBXD OR APPROVED EQUAL	
L4	2' SUSPENDED LED FIXTURE	SUSPENDED	LED, 19.0W	120/277V	LITHONIA: MODEL ZL1F-L24-2250LM-MDD-MVOLT-40K-80CRI OR APPROVED EQUAL	
L5	RECESSED LED DOWNLIGHT FIXTURE	RECESSED	LED, 22.0W	120/277V	LITHONIA: MODEL LDN6-35/20-MVOLT-GZ10-HSG OR APPROVED EQUAL	

CODED NOTES

1. PROVIDE ACCESSORIES AS REQUIRED TO CONNECT NEW ELECTRICAL SERVICE TO EXISTING PAD MOUNTED TRANSFORMER.

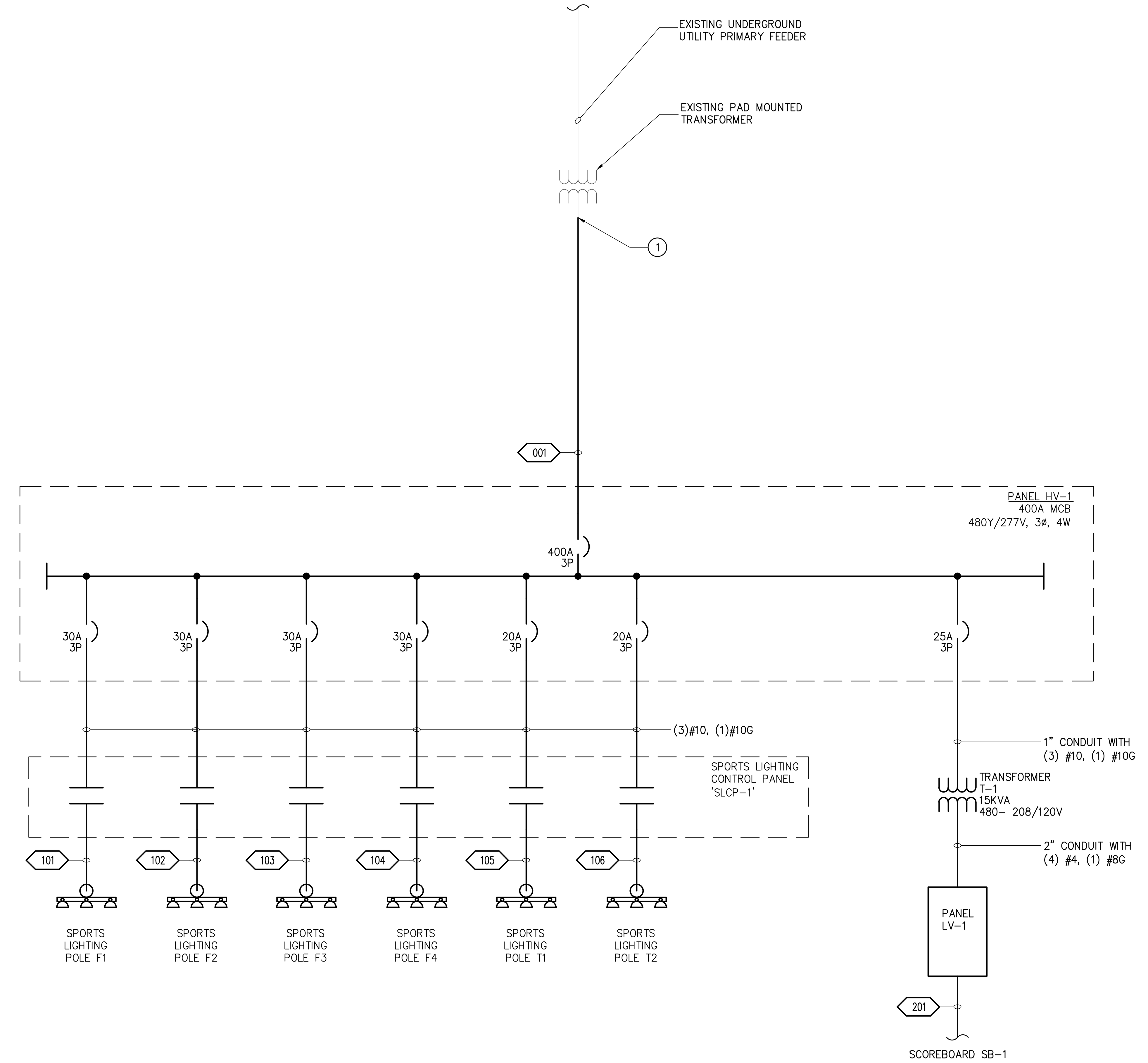

ELECTRICAL ONE-LINE DIAGRAM – TRACK
SCALE: NONE

Drawing Copyright © 2023

CHA

IT IS A VIOLATION OF LAW FOR ANY PERSON, UNLESS THEY ARE ACTING UNDER THE DIRECTION OF A LICENSED PROFESSIONAL ENGINEER, ARCHITECT, LANDSCAPE ARCHITECT OR LAND SURVEYOR TO ALTER AN ITEM IN ANY WAY. IF AN ITEM BEARING THE STAMP OF A LICENSED PROFESSIONAL IS ALTERED, THE ALTERING ENGINEER, ARCHITECT, LANDSCAPE ARCHITECT OR LAND SURVEYOR SHALL STAMP THE DOCUMENT AND INCLUDE THE NOTATION "ALTERED BY" FOLLOWED BY THEIR SIGNATURE, THE DATE OF SUCH ALTERATION, AND A SPECIFIC DESCRIPTION OF THE ALTERATION.

UNIVERSITY OF HARTFORD
ATHLETIC SPORTS COMPLEX
200 BLOOMFIELD AVE, WEST HARTFORD, CT 06117

No.	Submittal / Revision	App'd.	By	Date

ELECTRICAL SCHEDULES AND ONE-LINE DIAGRAM

Designed By:	Drawn By:	Checked By:
RWW	RWW	JJD
Issue Date:	Project No:	Scale:
1/13/2023	59815	AS SHOWN

Drawing No.:

E-501

LOCATION: ELEC. ROOM
MOUNTING: SURFACE
SOURCE: EXISTING TRANSFORMER

PANEL ID
HV–1

VOLTS, PHASE, WIRE: 480/277V, 3ϕ, 4W
MAINS: 400A MCB
SHORT CIRCUIT RATING: 22 KAIC

CKT	LOAD DESCRIPTION	CB AMPS/ POLE	CONN LOAD KVA	CONN LOAD KVA	CONN LOAD KVA	CONN LOAD KVA	CONN LOAD KVA	CONN LOAD KVA	CB AMPS/ POLE	LOAD DESCRIPTION	CKT
1	SPORTS LIGHTING POLE F1	30/3	5.00			4.50			30/3	SPORTS LIGHTING POLE F3	2
3				5.00			4.50				4
5					5.00			4.50			6
7	SPORTS LIGHTING POLE F2	30/3	4.50			5.00			30/3	SPORTS LIGHTING POLE F4	8
9				4.50			5.00				10
11					4.50			5.00			12
13	SPORTS LIGHTING POLE T1	20/3	1.70			1.40			20/3	SPORTS LIGHTING POLE T2	14
15				1.70			1.40				16
17					1.70			1.40			18
19	TRACK STORAGE ROOM LIGHTING	20/1	0.22			0.00			20/1	SPARE	20
21	STORAGE BUILDING EXTERIOR LIGHTING	20/1		0.12			0.00		20/1	SPARE	22
23	PUMP STATION	200/3	14.41					0.58	20/1	TRACK STORAGE BUILDING INTERIOR LIGHTING	24
25				14.41		5.0			20/1	TRANSFORMER T–1	26
27					14.41		5.0				28
29	SPARE	20/1	0.00					5.0			30
31	SPARE	20/1		0.00		0.00			20/1	SPARE	32
33	SPARE	20/1			0.00		0.00		20/1	SPARE	34
35	SPACE									SPACE	36
37	SPACE									SPACE	38
39	SPACE									SPACE	40
41	SPACE									SPACE	42
			25.83	25.73	25.61	15.90	15.90	16.48			
			TOTAL kVA								
			125.45								

NOTES:
SERVICE ENTRANCE RATED

LOCATION: ELEC. ROOM
MOUNTING: SURFACE
SOURCE: XFMR. T–1

PANEL ID
LV–1

VOLTS, PHASE, WIRE: 208/120V, 3ϕ, 4W
MAINS: 100A MCB
SHORT CIRCUIT RATING: 10 KAIC

CKT	LOAD DESCRIPTION	CB AMPS/ POLE	CONN LOAD KVA	CONN LOAD KVA	CONN LOAD KVA	CONN LOAD KVA	CONN LOAD KVA	CONN LOAD KVA	CB AMPS/ POLE	LOAD DESCRIPTION	CKT
1	SCOREBOARD	20/1	1.5			1.08			20/1	SOUTH TRACK SITE POWER	2
3	NORTH TRACK SITE POWER	20/1		1.08			1.44		20/1	STORAGE BUILDING RECEPTACLE POWER	4
5	EF–1	20/1			0.10			0.20	20/1	STORAGE SHED POWER AND LIGHTING	6
7	H–1	20/1	1.00			0.00			20/1	SLCP–1	8
9	ERU	30/2		1.00			0.1		20/1	DATA ROOM DEDICATED RECEPTACLE	10
11					1.00			0.1	20/1	DATA ROOM DEDICATED RECEPTACLE	12
13	EWH–1	50/2	4.75			2.87			30/3	PRESSBOX POWER PANEL	14
15				4.75			2.87				16
17	EH–3	100/2			9.00			2.87			18
19			9.00			0.6			20/1	ROLLUP DOOR MOTOR	20
21	SPARE	20/1		0.00			0.00		20/1	SPARE	22
23	SPARE	20/1			0.00			0.00	20/1	SPARE	24
25	SPARE	20/1	0.00			0.00			20/1	SPARE	26
27	SPARE	20/1		0.00			0.00		20/1	SPARE	28
29	SPARE	20/1			0.00			0.00	20/1	SPARE	30
31	SPACE	20/1							20/1	SPACE	32
33	SPACE	20/1							20/1	SPACE	34
35	SPACE	20/1							20/1	SPACE	36
37	SPACE	20/1							20/1	SPACE	38
39	SPACE	20/1							20/1	SPACE	40
41	SPACE	20/1							20/1	SPACE	42
			2.50	2.08	1.10	1.08	1.54	0.30			
			TOTAL kVA								
			8.60								

NOTES:

Drawing Copyright © 2023

CHA
350 Corporate Place, Suite 110
Rocky Hill, CT 06067-1861
860.257.8537 · www.chacompanies.com

University of Hartford

IT IS A VIOLATION OF LAW FOR ANY PERSON, UNLESS THEY ARE ACTING UNDER THE DIRECTION OF A LICENSED PROFESSIONAL ENGINEER, ARCHITECT, LANDSCAPE ARCHITECT OR LAND SURVEYOR, TO ALTER AN ITEM IN ANY WAY. IF AN ITEM BEARING THE STAMP OF A LICENSED PROFESSIONAL IS ALTERED, THE ALTERING ENGINEER, ARCHITECT, LANDSCAPE ARCHITECT OR LAND SURVEYOR SHALL AFFIX TO THE ITEM THE SEAL AND THE WORDS "ALTERED BY" FOLLOWED BY THEIR SIGNATURE, THE DATE OF SUCH ALTERATION, AND A SPECIFIC DESCRIPTION OF THE ALTERATION.

UNIVERSITY OF HARTFORD
ATHLETIC SPORTS COMPLEX
200 BLOOMFIELD AVE, WEST
HARTFORD, CT 06117

No.	Submittal / Revision	App'd.	By	Date

ELECTRICAL SCHEDULES

Designed By:	Drawn By:	Checked By:
RWW	RWW	JJD
Issue Date: 1/13/2023	Project No: 59815	Scale: AS SHOWN

Drawing No.:
E-502

File: V:\PROJECTS\ANY\K6\U59815.000\09_DESIGN\DRAWINGS\01_SHEETS\E-502-059815.DWG
Saved: 1/13/2023 3:21:31 PM Printed: 1/13/2023 3:22:26 PM Current User: Wright, Ryan LastSaveBy: 6456

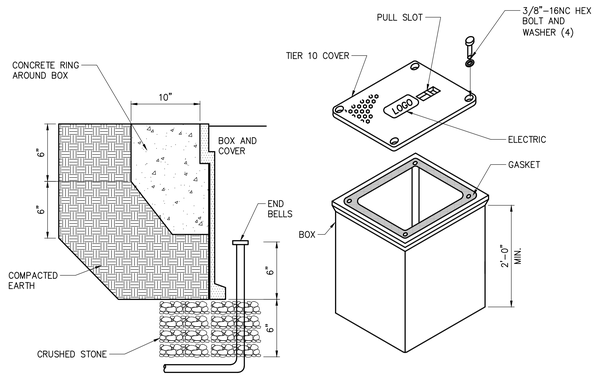

NOTES

1. SIZE HANDHOLE AT EACH LOCATION PER NEC. MINIMUM SIZE SHALL BE 18" X 18" X 24".
2. PROVIDE ALL CONDUITS WITH A PULL ROPE.
3. REPLACE EXISTING SURFACE CONDITIONS IN KIND TO INCLUDE, BUT NOT LIMITED TO: CONCRETE, CRUSHED STONE, SELECT GRAVEL, ASPHALT CONCRETE, TOPSOIL AND GRASS.
4. ALL CONDUITS ENTER FROM BOTTOM, RISE ABOVE STONE 6" AND HAVE END BELLS.

1 HANDHOLE – DETAIL
– NOT TO SCALE

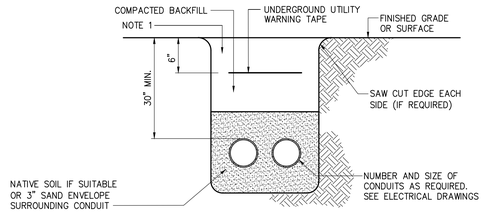

NOTE:

1. REPLACE EXISTING SURFACE CONDITIONS IN KIND TO INCLUDE, BUT NOT LIMITED TO: CONCRETE, CRUSHED STONE, SELECT GRAVEL, ASPHALT, TOPSOIL AND GRASS

2 UNDERGROUND CONDUIT
– NOT TO SCALE

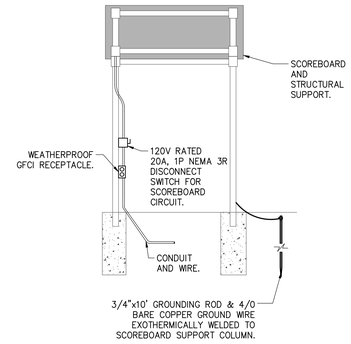

3 SCOREBOARD ELECTRICAL CONNECTION DETAIL
– NOT TO SCALE

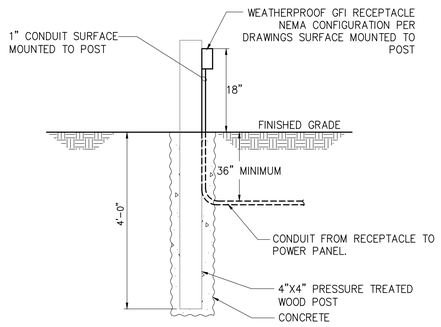

4 POWER PEDESTAL
– NOT TO SCALE

Drawing Copyright © 2020

CHA
350 Corporate Place, Suite 110
Rocky Hill, CT 06067-1861
860.257.8537 www.chacompanies.com

University of Hartford

IT IS A VIOLATION OF LAW FOR ANY PERSON, UNLESS THEY ARE ACTING UNDER THE DIRECTION OF A LICENSED PROFESSIONAL ENGINEER, ARCHITECT, LANDSCAPE ARCHITECT OR LAND SURVEYOR TO ALTER AN ITEM IN ANY WAY. IF AN ITEM BEARING THE STAMP OF A LICENSED PROFESSIONAL IS ALTERED, THE ALTERING ENGINEER, ARCHITECT, LANDSCAPE ARCHITECT OR LAND SURVEYOR SHALL AFFIX TO THE ITEM THE ORIGINAL STAMP WITH THE NOTATION "ALTERED BY" FOLLOWED BY THEIR SIGNATURE, THE DATE OF SUCH ALTERATION, AND A SPECIFIC DESCRIPTION OF THE ALTERATION.

UNIVERSITY OF HARTFORD
ATHLETIC SPORTS COMPLEX
200 BLOOMFIELD AVE, WEST
HARTFORD, CT 06117

No.	Submittal / Revision	App'd.	By	Date

ELECTRICAL DETAILS

Designed By:	Drawn By:	Checked By:
RWW	RWW	JJD
Issue Date:	Project No:	Scale:
1/13/2023	59815	AS SHOWN

Drawing No.:
E-701

File: V:\PROJECTS\ANY\K6\059815.000\09_DESIGN\DRAWINGS\01_SHEETS\E-701-059815.DWG
Saved: 1/13/2023 12:06:35 PM Plotted: 1/13/2023 3:22:27 PM Current User: Wright, Ryan LastSavedBy: 6456

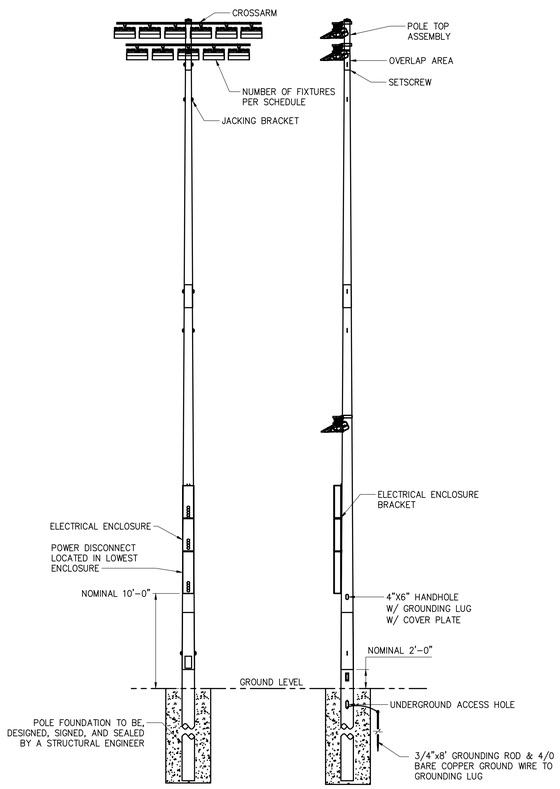

NOTES:

1. PROVIDE PRE-CONSTRUCTED WIRE HARNESS FOR LIGHTING FIXTURE WIRING WITH KELLUM GRIPS AND QUICK CONNECT PLUGS FOR EASE OF CONNECTION IN THE FIELD. (HARNESSES WRAPPED IN MYLAR CASING AND A PROTECTIVE SLEEVE FOR ABRASION RESISTANCE.)
2. ALL STEEL CROSSARMS AND POLES SHALL BE HOT DIPPED GALVANIZED.
3. ALL ELECTRICAL ENCLOSURES SHALL BE POWDER COATED ALUMINUM.
4. ALL THREADED FASTENERS, HINGES, AND LATCHES SHALL BE STAINLESS STEEL.
5. PROVIDE POLE TOP ASSEMBLY W/ FACTORY WIRING AND AIMING (COMPLETE WELDED ASSEMBLY).
6. JACKING BRACKET DESIGN ALLOWS FOR EASY USE OF "COME-A-LONGS" FOR INSTALLATION.
7. ALL EXPOSED HARDWARE SHALL BE TAMPER RESISTANT.

1 SPORTS LIGHTING POLE
– NOT TO SCALE

SYMBOL	DESCRIPTION
	(2) 4' LINEAR LED LIGHT WITH PARABOLIC DIFFUSERS (17 WATT)
	ELECTRICAL DISTRIBUTION LOAD CENTER W/ MAIN DISCONNECT–120/208V. THREE PHASE, 100 AMP CAPACITY, QO327M100 OR EQUAL. (1) 1½" CONDUIT THRU FLOOR–100 AMP CAPACITY W/ (1) ¾" CONDUIT THRU FLOOR
S_1	PASS & SEYMOUR #870 SPEC. GRADE, GROUNDING TYPE, SWITCH
EX–1	MORRIS SQUARE HEAD LED COMBO EXIT/EMERGENCY LIGHT. PRODUCT #73442
	PASS & SEYMOUR CR20 SPEC. GRADE, GROUNDING TYPE, RECEPT GFI WHERE NOTED UP 18" UNLESS NOTED OTHERWISE
	WIREMOLD #5400 SERIES ELECTRIC PLUG STRIPS W/ RECEPTS AND COMMUNICATION JACK COVERS 48" O.C. AND 1" CONDUIT THRU FLOOR AT END–UP 14"
WP EL–2	180–DEGREE WHITE OUTDOOR LED MOTION SECURITY LIGHT W/ DUSK TO DAWN SENSOR #DFI–5982–WH WALL MOUNTED ABOVE THE CENTER OF THE DOOR.
WP EL–1	LITHONIA #ELA–W–NX–N0806 REMOTE EMERGENCY LIGHT HEAD
J A	ROOF ELECTRICAL ACCESS– 2X4 WATERPROOF FASCIA MOUNTED JUNCTION BOX WITH 3/4" EMT CONDUIT TO ENTRANCE PANEL FOR (FUTURE USE) (WEATHER–RESISANT RECEPTACLES IN WEATHERPROOF ENCLOSURES TO BE INSTALLED ON GUARD RAILS BY EC)
	ZONELINE #AZ61H09D 3.5 KW ELECTRIC WALL MOUNT UNIT WITH INTEGRAL THERMOSTAT HEAT PUMP UNIT–UP 6" 9,400 BTU COOL 8,300 BTU HEAT

NOTES:
1) THE UTILITY METER BASE & FEEDER SYSTEM TO BE PROVIDED BY OTHERS ON SITE, UNDER THE AUTHORITY OF THE LOCAL JURISDICTIONS.
2) CONNECTION OF ELECTRICAL SERVICE TO BE PERFORMED BY A LICENSED ELECTRICIAN. (BY OTHERS)
3) ALL NUMBERS ON ELECTRICAL CIRCUITS DESIGNATE FEED SIDE OF CIRCUIT.
4) ALL BRANCH CIRCUIT WIRING TO BE ENCASED IN THIN WALL EMT CONDUIT–MIN 12 THHN WIRE OR MC CABLE.

PANEL PB1

DESCRIPTION: 120/208V THREE PHASE, 60Hz 100 AMP MAIN DISCONNECTING BREAKER
FEEDER SIZE: #1 COPPER W/ #6 GRND
FED FROM:

CKT	DESCRIPTION	BKR	PL	WIRE	WATTS	WATTS	WIRE	PL	BKR	DESCRIPTION	CKT
1	ZONELINE HVAC	20	2	12	3500	540	12	1	20	PRESS BOX LIGHTING	2
3						900	12	1	20	PRESS BOX WIRE–MOLD	4
5	PRESS BOX GENERAL RECEPT.	20	1	12	360	1920	12	1	20	ROOFTOP RECEPTACLE	6
7	SPARE	20	1					1	20	SPARE	8
9	SPARE	20	1					1	20	SPARE	10
11	SPARE	20	1					1	20	SPARE	12
					3860	3360	WATTS				

TOTAL WATTS: 7,220
TOTAL AMPS: 30.08

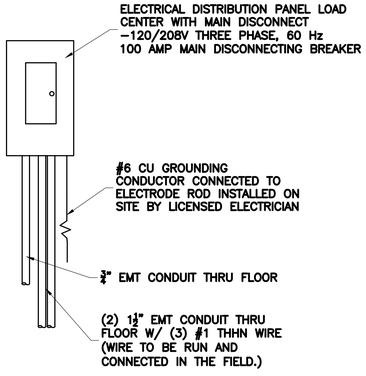

2 PRESSBOX ELECTRICAL PANEL ELEVATION AND SCHEDULE
x NOT TO SCALE

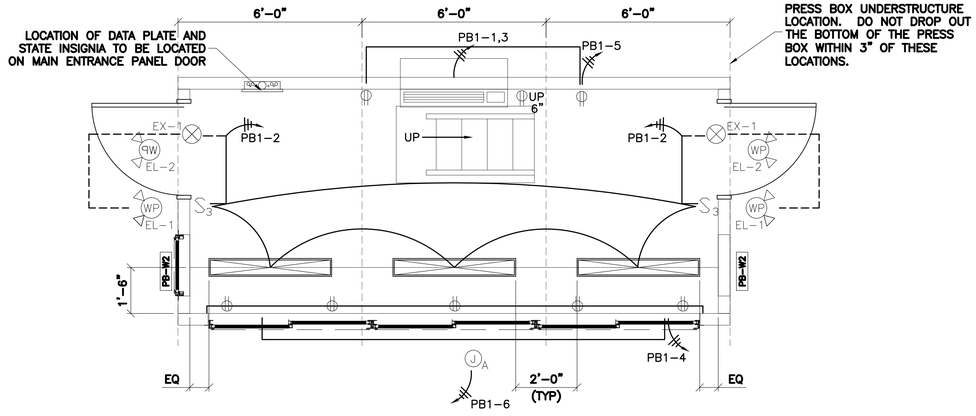

3 PRESSBOX ELECTRICAL PLAN
x 1/2" = 1'-0"

Drawing Copyright © 2023

CHA
350 Corporate Place, Suite 110
Rocky Hill, CT 06067-1861
860.257.4537 www.chacompanies.com

University of Hartford

IT IS A VIOLATION OF LAW FOR ANY PERSON, UNLESS THEY ARE ACTING UNDER THE DIRECTION OF A LICENSED PROFESSIONAL ENGINEER, ARCHITECT, LANDSCAPE ARCHITECT OR LAND SURVEYOR, TO ALTER AN ITEM IN ANY WAY. IF AN ITEM BEARING THE STAMP OF A LICENSED PROFESSIONAL IS ALTERED, THE ALTERING ENGINEER, ARCHITECT, LANDSCAPE ARCHITECT OR LAND SURVEYOR SHALL ATTACH TO THE ITEM THE ADDITION TO THE NOTATION "ALTERED BY" FOLLOWED BY THEIR SIGNATURE, THE DATE OF SUCH ALTERATION, AND A SPECIFIC DESCRIPTION OF THE ALTERATION.

UNIVERSITY OF HARTFORD
ATHLETIC SPORTS COMPLEX
200 BLOOMFIELD AVE, WEST
HARTFORD, CT 06117

No.	Submittal / Revision	App'd.	By	Date

ELECTRICAL DETAILS

Designed By:	Drawn By:	Checked By:
RWW	RWW	JJD
Issue Date: 1/13/2023	Project No: 59815	Scale: AS SHOWN

Drawing No.:
E-702

File: V:\PROJECTS\ANY\K6\U59815.000\09_DESIGN\DRAWINGS\01_SHEETS\E-702-059815.DWG
Saved: 1/13/2023 3:21:37 PM Printed: 1/13/2023 3:22:34 PM Current User: Wright, Ryan LastSavedBy: 8456